Manuals+
Q & A | Deep Search | Upload

Full Size Upholstered Platform Bed with Carton Ears Shaped Headboard

User Manual

Full Size Upholstered Platform Bed with Carton Ears Shaped Headboard

Brand: Generic

1. Introduction

Thank you for choosing the Generic Full Size Upholstered Platform Bed with Carton Ears Shaped Headboard. This manual provides essential information for the safe assembly, operation, and maintenance of your new bed frame. Please read these instructions carefully before beginning assembly and retain them for future reference.

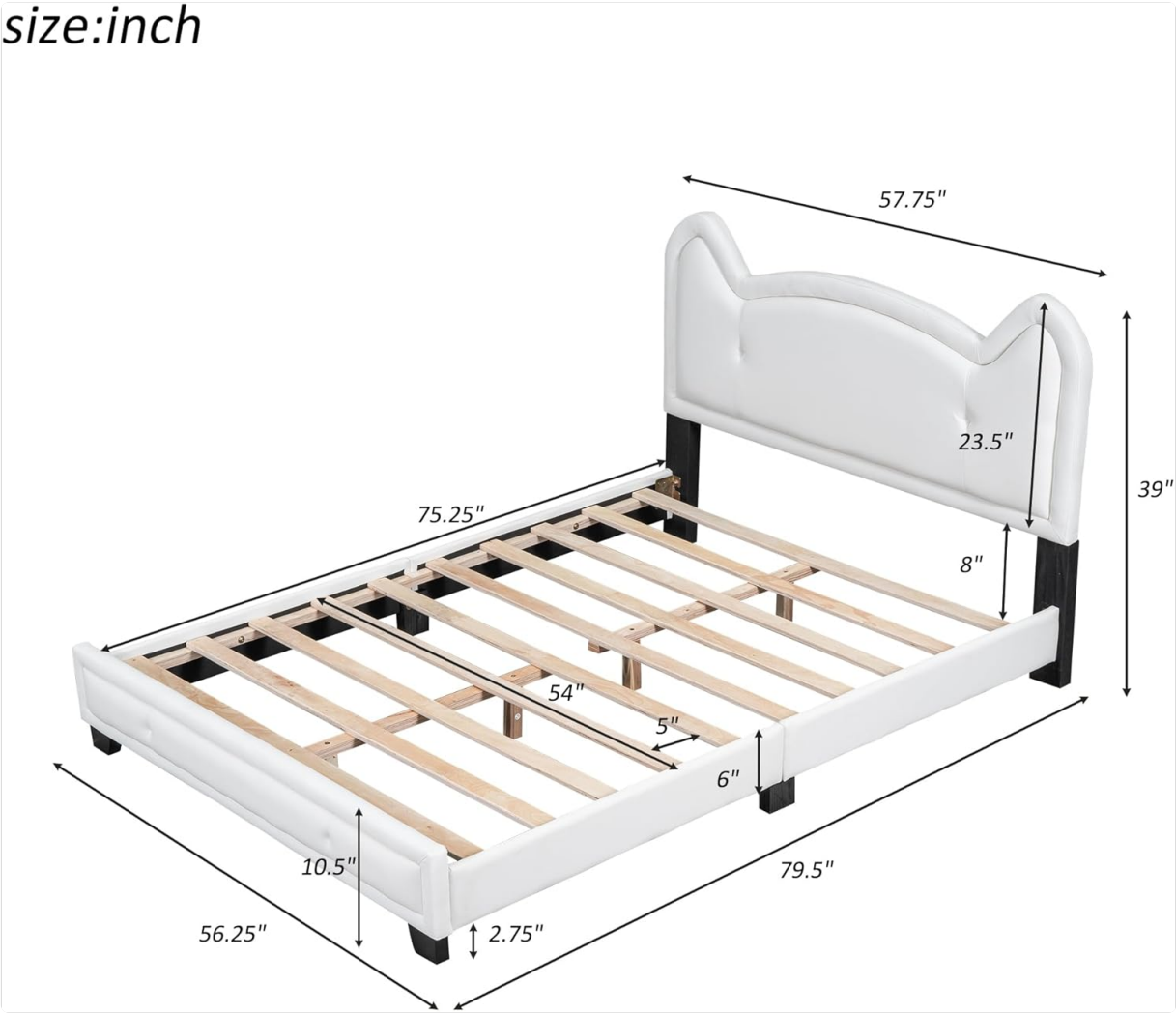

Image 1.1: The assembled platform bed with its distinctive carton ears headboard.

2. Safety Information

To ensure safe use of this product, please observe the following precautions:

- Always assemble the bed frame on a soft, clean surface to prevent damage to the product and your flooring.
- Ensure all bolts, screws, and connectors are securely tightened before use. Periodically check and re-tighten as necessary.
- Do not allow children to climb or play on the bed frame during assembly.
- Do not exceed the recommended weight capacity for a full-size bed.
- Keep small parts out of reach of children to prevent choking hazards.
- Use only the mattress size appropriate for a full-size bed frame.

3. Package Contents

Before assembly, unpack all components and verify that you have received all parts listed below. If any parts are missing or damaged, please contact customer support.

- Headboard (Upholstered with Carton Ears Design)
- Footboard (Upholstered)
- Side Rails (Upholstered, 2 pieces)
- Center Support Beam
- Support Legs (for center beam and frame corners)
- Wooden Slats (Multiple pieces)
- Hardware Pack (Bolts, washers, nuts, Allen wrench)

Image 3.1: Overview of the main bed frame components.

4. Setup and Assembly

Tools Required: Included Allen wrench. A Phillips head screwdriver (not included) may be helpful for some fasteners.

1. **Step 1: Attach Side Rails to Headboard.** Align the side rails with the pre-drilled holes on the headboard. Secure them using the provided bolts and washers. Do not fully tighten yet.
2. **Step 2: Attach Side Rails to Footboard.** Connect the other end of the side rails to the footboard in the same manner. Once all connections are made, fully tighten all bolts.
3. **Step 3: Install Center Support Beam.** Attach the center support beam to the designated brackets on the headboard and footboard. Secure with bolts.
4. **Step 4: Attach Support Legs.** Screw the support legs into the bottom of the center support beam and the corner of the bed frame. Ensure they are firmly attached and provide stable support.
5. **Step 5: Place Wooden Slats.** Lay the wooden slats across the side rails, distributing them evenly. Secure the slats to the side rails using the pre-drilled holes and screws, if provided.

Image 4.1: Detail of the headboard connection and slat placement.

5. Operating Instructions

This platform bed is designed for use with a full-size mattress. No box spring is required due to the integrated wooden slat support system.

- Place your full-size mattress directly onto the wooden slats.
- Ensure the mattress is centered and sits securely within the frame.
- Avoid jumping on the bed, as this can damage the frame and slats.
- Periodically check all connections to ensure they remain tight and secure.

6. Maintenance

Proper care will extend the life and appearance of your upholstered platform bed.

- **Cleaning:** For general cleaning, gently wipe the upholstered surfaces with a clean, damp cloth. For spills, blot immediately with a clean, dry cloth. Avoid harsh chemicals or abrasive cleaners.
- **Dusting:** Regularly dust the frame with a soft, dry cloth.
- **Inspection:** Every few months, inspect all bolts and connections. Re-tighten any loose hardware to maintain stability.
- **Avoid Direct Sunlight:** Prolonged exposure to direct sunlight can cause fading of the upholstery.

7. Troubleshooting

If you encounter any issues with your bed frame, refer to the following common problems and solutions:

Problem	Possible Cause	Solution
Bed frame is wobbly or unstable.	Loose hardware. Uneven floor.	Check and tighten all bolts and screws. Ensure all support legs are making contact with the floor. Use shims if necessary for uneven floors.
Squeaking noises.	Loose connections. Slats rubbing.	Tighten all hardware. Ensure slats are properly seated and not rubbing against each other or the frame.
Mattress slides on slats.	Lack of friction.	Consider placing a non-slip mat between the mattress and the slats.

8. Specifications

Detailed specifications for the Full Size Upholstered Platform Bed:

Feature	Detail
Product Dimensions (Overall)	79.5"L x 57.75"W x 39"H
Material	Upholstered (Solid Pine Wood + MDF Frame)
Color	White

Feature	Detail
Headboard Design	Carton Ears Shaped
Box Spring Required	No
Item Weight	89.5 pounds

Image 8.1: Dimensional drawing of the bed frame.

9. Warranty and Support

This product comes with a standard manufacturer's warranty against defects in materials and workmanship. For specific warranty details, claims, or technical support, please refer to the documentation included with your purchase or contact the seller directly.

Please have your purchase receipt and product model information (ASIN: B0F26YV4TC) ready when contacting support.