Saved from manuals.plus.
Open the live page for links to other documents and user manuals.

Blütezeit B0F23VGG4J

Blütezeit Automatic Sliding Gate Opener User Manual

Model: B0F23VGG4J | Brand: Blütezeit

1. Introduction and Product Overview

Thank you for choosing the Blütezeit Automatic Sliding Gate Opener. This powerful and efficient system is designed to provide secure and convenient access for residential driveways, small businesses, and various gate types including wood and metal. Featuring a 130W pure copper motor, it offers strong torque and smooth operation, capable of handling gates up to 900 lbs.

The system includes advanced safety features such as an infrared sensor for obstacle detection and resistance rebound technology, ensuring safe operation. With customizable settings like auto-close and support for up to 100 remotes, it offers flexible control for your needs.

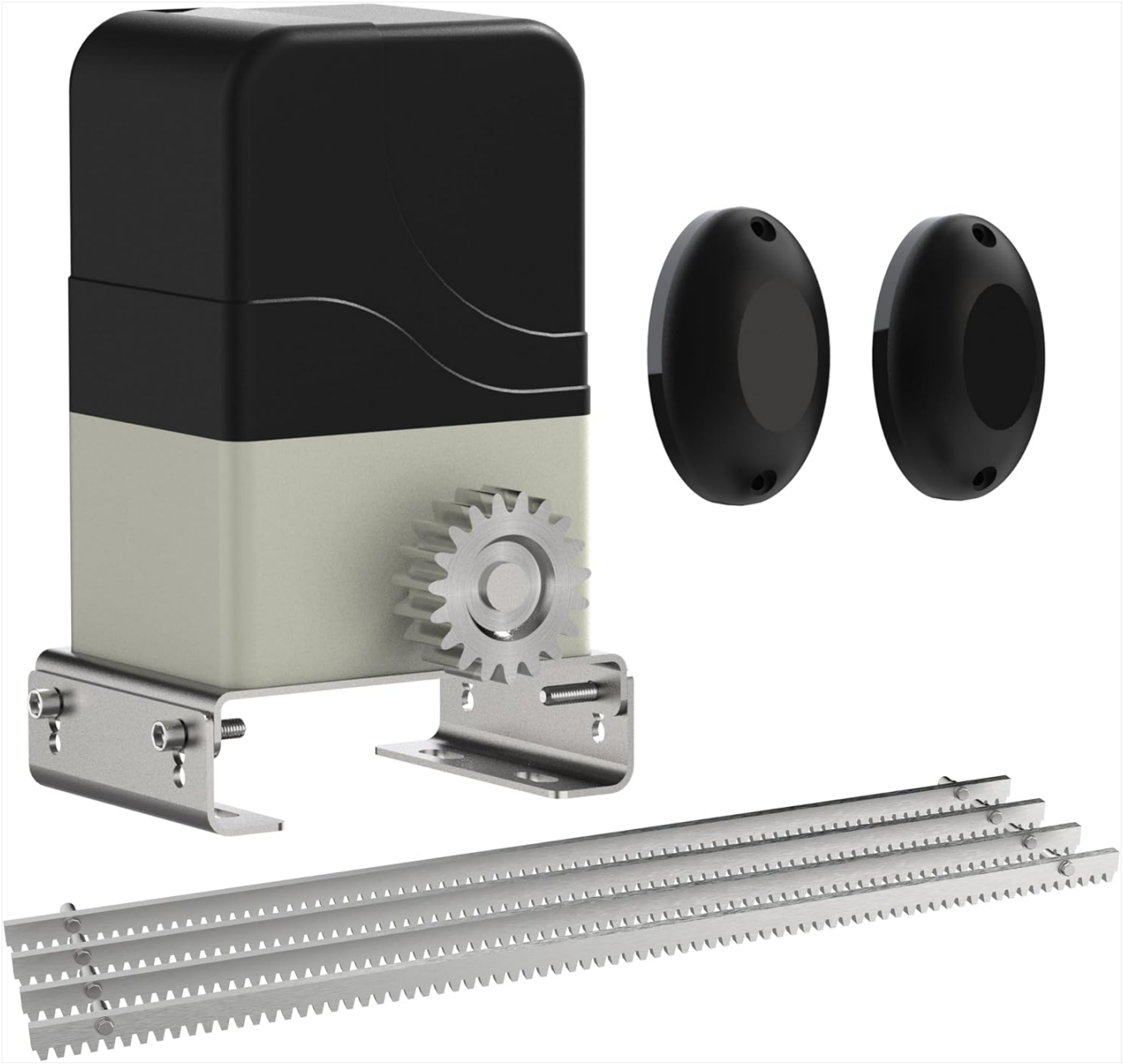

Image 1.1: The Blütezeit Automatic Sliding Gate Opener, including the motor unit, infrared sensors, and steel racks.



Image 1.2: Key features highlighted: Compact yet powerful design, durable copper motor, weather-resistant construction, and easy setup for DIY projects.

2. Safety Information

Please read and understand all safety instructions before installation and operation to prevent injury or damage.

- Always keep the area around the gate clear of obstructions, children, and pets.
- Do not allow children to operate the gate opener or play with the remote controls.
- Ensure the gate is properly installed and in good working condition before installing the opener.
- In case of power failure, use the manual release key to operate the gate manually.
- Regularly inspect the gate opener and its components for signs of wear or damage.
- Professional installation is recommended for optimal safety and performance.

3. Package Contents

Verify that all components are present and undamaged upon unpacking:

- 1 x Blütezeit Sliding Gate Opener Motor Unit
- 4 x Steel Racks (total 13.12ft, 3.28ft/pc)
- 2 x 433.92MHz Rolling Code Remote Controls
- 1 x Infrared Sensor Pair
- 2 x Magnetic Limit Switches (Red for Close, Blue for Open)
- Mounting Hardware Kit (bolts, nuts, brackets)
- 1 x Manual Release Key

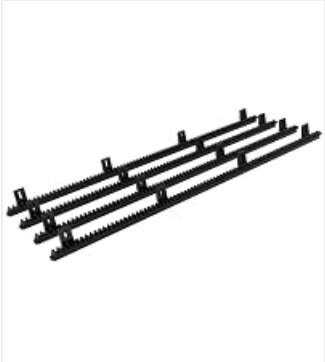

Image 3.1: High-strength steel racks, essential for the gate's movement.



Image 3.2: Two rolling code remote controls for secure access.



Image 3.3: The infrared sensor pair, crucial for obstacle detection.

4. Setup and Installation

Follow these steps for proper installation of your gate opener:

1. **Mount the Motor Unit:** Securely mount the motor unit on a stable, level surface next to the gate, ensuring the gear aligns with the gate's rack path. Use the provided mounting brackets and hardware.

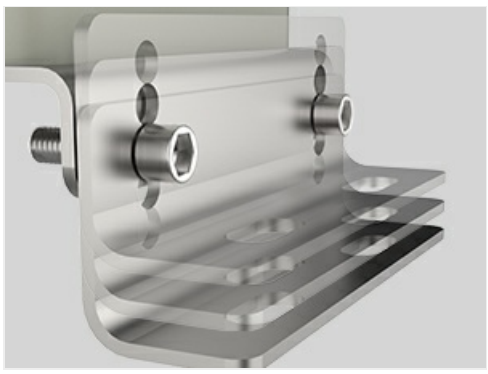

Image 4.1: Detail of the adjustable mounting bracket for secure installation.

2. **Install the Steel Racks:** Attach the steel racks along the length of the gate, ensuring they are level and properly meshed with the motor's gear. The racks should be installed sequentially, maintaining a small gap (approx. 1mm) between segments to allow for thermal expansion.

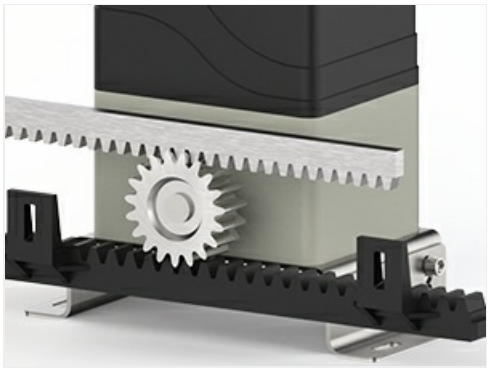

Image 4.2: Proper engagement between the motor's gear and the steel rack.

3. **Connect the Infrared Sensor:** Install the infrared sensor pair on opposite sides of the gate opening, ensuring a clear line of sight between them. Connect the sensors to the motor unit according to the wiring diagram in the full manual. This sensor provides crucial safety by detecting obstacles in the gate's path.

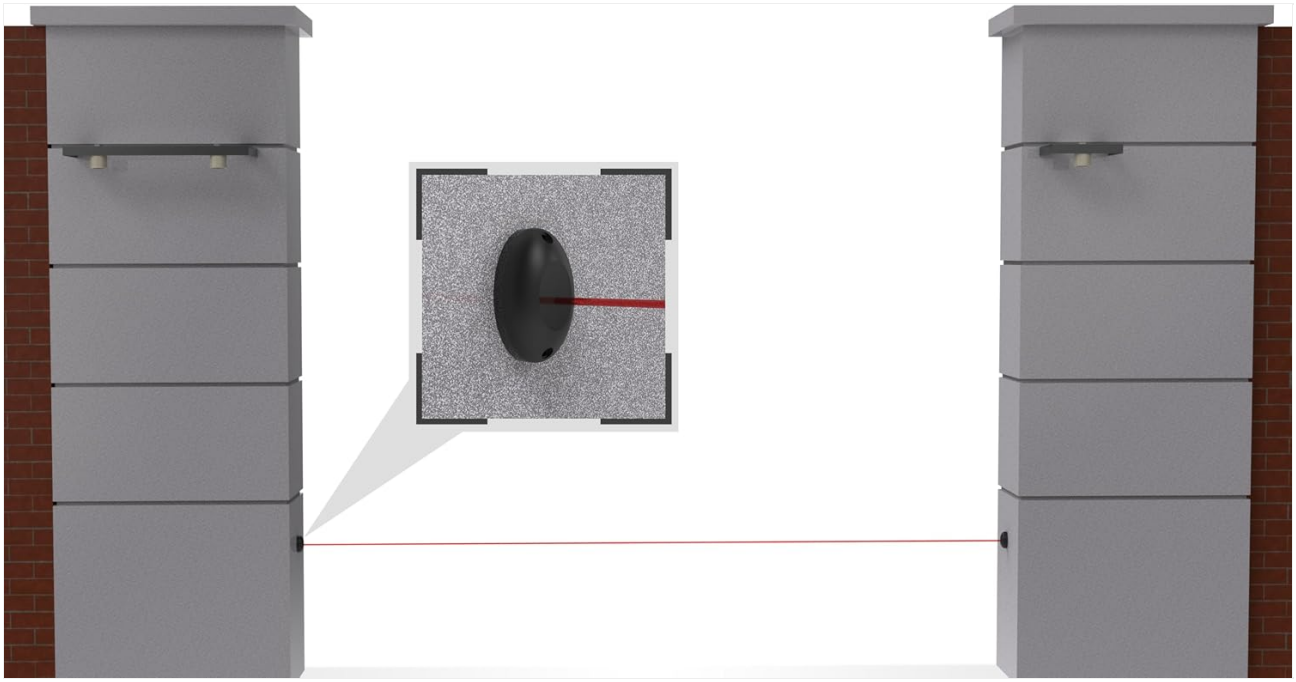

Image 4.3: Diagram showing the correct placement of the infrared sensor across the gate opening.

4. **Set Magnetic Limit Switches:** Attach the red and blue magnetic limit switches to the gate rack. The red switch defines the gate's fully closed position, and the blue switch defines the fully open position. Adjust their placement to ensure the gate stops precisely at the desired open and closed points.



Image 4.4: A magnetic limit switch attached to the gate rack, used for precise positioning.

5. **Power Connection:** Connect the gate opener to a stable AC110V/60Hz power source. Ensure all electrical

connections are secure and comply with local electrical codes.

6. **Test Operation:** After installation, perform several test cycles to ensure the gate opens and closes smoothly, the limit switches function correctly, and the infrared sensor detects obstacles as intended.

5. Operating Instructions

The Blütezeit Automatic Sliding Gate Opener offers convenient operation via remote control and customizable settings.

- **Remote Control:** Use the provided 433.92MHz rolling code remotes to open, close, or stop the gate. The remotes have an extended control range of 100-160 feet in open areas.



Image 5.1: Operating the gate from a distance using the remote control.

- **Auto-Close Function:** The gate opener features an adjustable auto-close function, allowing you to set a delay from 0 to 60 seconds after the gate opens before it automatically closes. This can be configured via the control board settings.
- **PED Mode:** For pedestrian access, the system includes a PED mode that allows for partial gate opening, enabling foot traffic without fully opening the gate.
- **Manual Release:** In case of power outage or malfunction, insert the manual release key into the designated lock cylinder on the motor unit and turn it to disengage the motor, allowing manual operation of the gate.



Image 5.2: Location of the manual release keyhole for disengaging the motor.

6. Maintenance

Regular maintenance ensures the longevity and optimal performance of your gate opener:

- **Cleanliness:** Keep the motor unit, gear, and racks free from dirt, debris, and ice.
- **Lubrication:** Periodically lubricate the gate's wheels, hinges, and the motor's gear with appropriate grease to ensure smooth operation and reduce wear.
- **Rack Alignment:** Check the alignment of the steel racks regularly to ensure they remain properly meshed with the motor's gear.
- **Sensor Check:** Test the infrared sensor monthly by placing an object in its path to ensure it stops the gate.
- **Hardware Inspection:** Inspect all mounting bolts and connections for tightness. Tighten any loose hardware.

7. Troubleshooting

Refer to the table below for common issues and their solutions:

Problem	Possible Cause	Solution
Gate does not move.	No power; remote battery dead; manual release engaged.	Check power supply; replace remote battery; disengage manual release.
Gate stops unexpectedly.	Obstruction detected by infrared sensor; limit switch misaligned.	Clear obstruction; check and adjust infrared sensor alignment; re-align limit switches.
Remote control not working.	Battery low/dead; out of range; interference.	Replace battery; move closer to the gate; check for sources of interference.
Gate opens/closes partially.	Limit switches incorrectly set.	Adjust the position of the magnetic limit switches.

8. Specifications

- **Motor Power:** 130W Pure Copper Motor
- **Max Gate Weight:** 900 lbs
- **Operating Speed:** 0.7 ft/s (adjustable)
- **Power Supply:** AC110V/60Hz
- **Remote Frequency:** 433.92MHz
- **Remote Control Range:** 100-160 feet (open areas)
- **Auto-Close Timer:** 0-60 seconds (adjustable)
- **Rack Material:** High-strength Steel
- **Safety Features:** Infrared Sensor, Resistance Rebound Technology

9. Warranty and Support

Blütezeit products undergo strict quality checks to ensure durability and performance. For any technical assistance, installation queries, or troubleshooting, please contact Blütezeit professional technical support.



Image 9.1: Blütezeit offers professional and comprehensive technical support via online service, phone support, and engineer solutions.

We are dedicated to offering reliable assistance, ensuring smooth installation and operation, and making your experience as seamless as possible.

© 2025 Blütezeit. All rights reserved.

Ask a question about this manual

Ask about setup, troubleshooting, compatibility, parts, safety, or missing instructions. Manuals+ will review the question and use this page's manual context to help answer it.

Name

Anonymous

Email

you@example.com

After a successful submission, we securely hash the supplied account or form email before sending it to Microsoft Advertising for conversion attribution. Privacy details.

Question

Example: How do I reset this device or fix this error?

Details

Model number, symptoms, what you tried, or the section of the manual you are using.

Submit question

Open the live page

https://manuals.plus/asin/B0F23VGG4J

More documents and user manuals: **https://manuals.plus/**