Saved from manuals.plus.
Open the live page for links to other documents and user manuals.

VEVOR 7601Z-48"

VEVOR 48 Inch 500 lb Heavy Duty Drawer Slides

INSTRUCTION MANUAL

Setup Operation Maintenance Troubleshooting Specifications Warranty & Support

Introduction

This manual provides instructions for the proper installation, operation, and maintenance of your VEVOR 48 Inch 500 lb Heavy Duty Drawer Slides. Please read this manual thoroughly before installation and retain it for future reference. These full extension side mount ball bearing rails are designed for industrial cabinets, tool chests, and workbenches, offering a robust solution for heavy loads.

Setup and Installation

Before beginning installation, ensure you have all necessary tools and components. The package includes one pair of 48-inch drawer slides and 24 screws for mounting.

1. Pre-Installation Checks

- **Measure Drawer and Cabinet:** Accurately measure the length of your drawers and cabinets, excluding any frame boards. The slide length should not be less than or equal to the depth of the drawer.
- **Clearance:** Ensure there is adequate space for the slides. The required space between the drawer and cabinet wall is 0.77 inches (19.5 mm) on each side, totaling 1.54 inches (39 mm) for both sides.
- **Inspect Components:** Verify that all parts are present and undamaged.

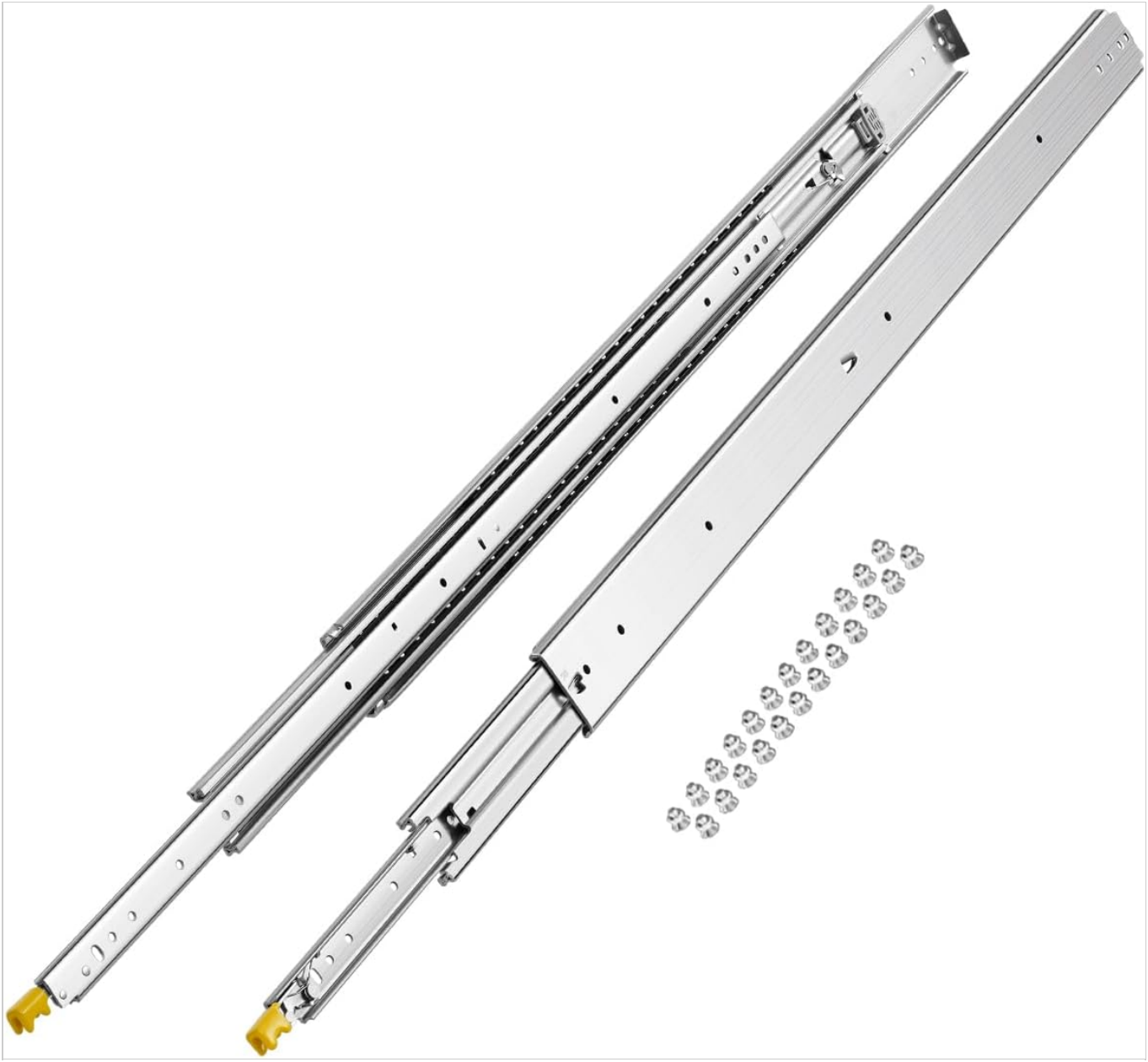

Image: Diagram illustrating the necessary clearance and dimensions for proper drawer slide installation. Note the 0.77 inch (19.5 mm) space required on each side between the drawer and cabinet.

2. Installation Steps

1. **Separate Slides:** Extend the drawer slide fully and locate the release lever (typically yellow). Press the lever to separate the inner slide member from the main body.
2. **Mount Outer Member to Cabinet:** Attach the outer slide member to the inside of the cabinet or workbench using the provided screws. Ensure the slide is level and properly aligned.
3. **Mount Inner Member to Drawer:** Attach the inner slide member to the side of the drawer. Ensure it is flush with the bottom edge of the drawer and aligned correctly.
4. **Reassemble:** Carefully align the inner slide member with the outer slide member and push the drawer into the cabinet until the slides click into place. Test the movement to ensure smooth operation.



Image: Example of side mount drawer slides installed within a cabinet, demonstrating the mounting position.

Operation

The VEVOR Heavy Duty Drawer Slides are designed for smooth, full extension with a dual locking mechanism for enhanced security.

1. Full Extension

These slides feature a 3-fold full extension design, allowing the drawer to extend completely out of the cabinet. This provides full access to the contents of the drawer, maximizing usable space.



Image: A drawer fully extended from a vehicle's rear storage system, showcasing the full extension capability of the slides.

2. Dual Lock Mechanism

The slides are equipped with a dual locking design to prevent accidental movement. The lock engages when the drawer is fully closed and when it is fully extended. During the process of pulling the drawer out or pushing it in, the lock is disengaged.

- **To Lock:** Push the drawer fully closed or pull it fully open until the lock engages with a click.
- **To Unlock:** Press the yellow lever on the slide to release the lock and allow the drawer to move.

Available Slide Sizes

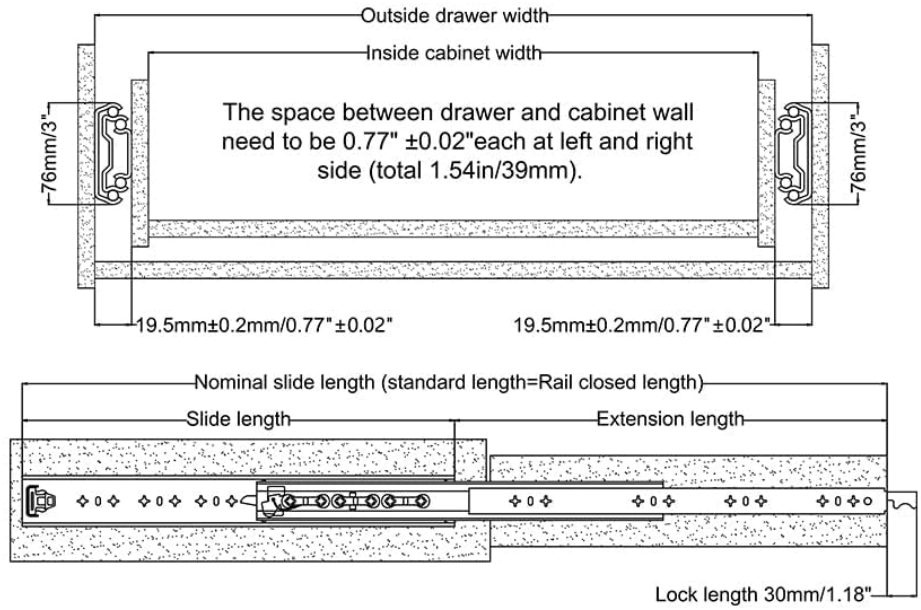

Slide size	Slide length	Extension length	Drawer length		Minimum cabinet depth
			Min	Max	
18 inch	457.2mm/18"	457.2mm/18"	457.2mm/18"	508mm/20"	465mm/18.3"
20 inch	508mm/20"	508mm/20"	508mm/20"	558.8mm/22"	515mm/20.28"
22 inch	558.8mm/22"	558.8mm/22"	558.8mm/22"	609.6mm/24"	565mm/22.25"
24 inch	609.6mm/24"	609.6mm/24"	609.6mm/24"	660.4mm/26"	615mm/24.21"
28 inch	711.2mm/28"	711.2mm/28"	711.2mm/28"	762mm/30"	720mm/28.35"
30 inch	762mm/30"	762mm/30"	762mm/30"	812.8mm/32"	770mm/30.32"
32 inch	812.8mm/32"	812.8mm/32"	812.8mm/32"	863.6mm/34"	820mm/32.28"
36 inch	914.4mm/36"	914.4mm/36"	914.4mm/36"	965.2mm/38"	920mm/36.22"
38 inch	965.2mm/38"	965.2mm/38"	965.2mm/38"	1016mm/40"	970mm/38.19"
40 inch	1016mm/40"	1016mm/40"	1016mm/40"	1066.8mm/42"	1020mm/40.18"
44 inch	1117.6mm/44"	1117.6mm/44"	1117.6mm/44"	1168.4mm/46"	1125mm/44.29"
48 inch	1219.2mm/48"	1219.2mm/48"	1219.2mm/48"	1270mm/50"	1225mm/48.23"
52 inch	1320.8mm/52"	1320.8mm/52"	1320.8mm/52"	1371.6mm/54"	1325mm/52.17"
56 inch	1422.4mm/56"	1422.4mm/56"	1422.4mm/56"	1473.2mm/58"	1430mm/56.3"
60 inch	1524mm/60"	1524mm/60"	1524mm/60"	1574.8mm/62"	1530mm/60.24"

Image: Visual representation of the dual lock design, showing how the slides lock when fully closed and fully extended, and are unlocked during movement.

3. Smooth and Quiet Sliding

Double-row ball bearings ensure smooth and effortless sliding. Nylon cushioning on the center slides helps to reduce noise during operation and prevents bouncing.

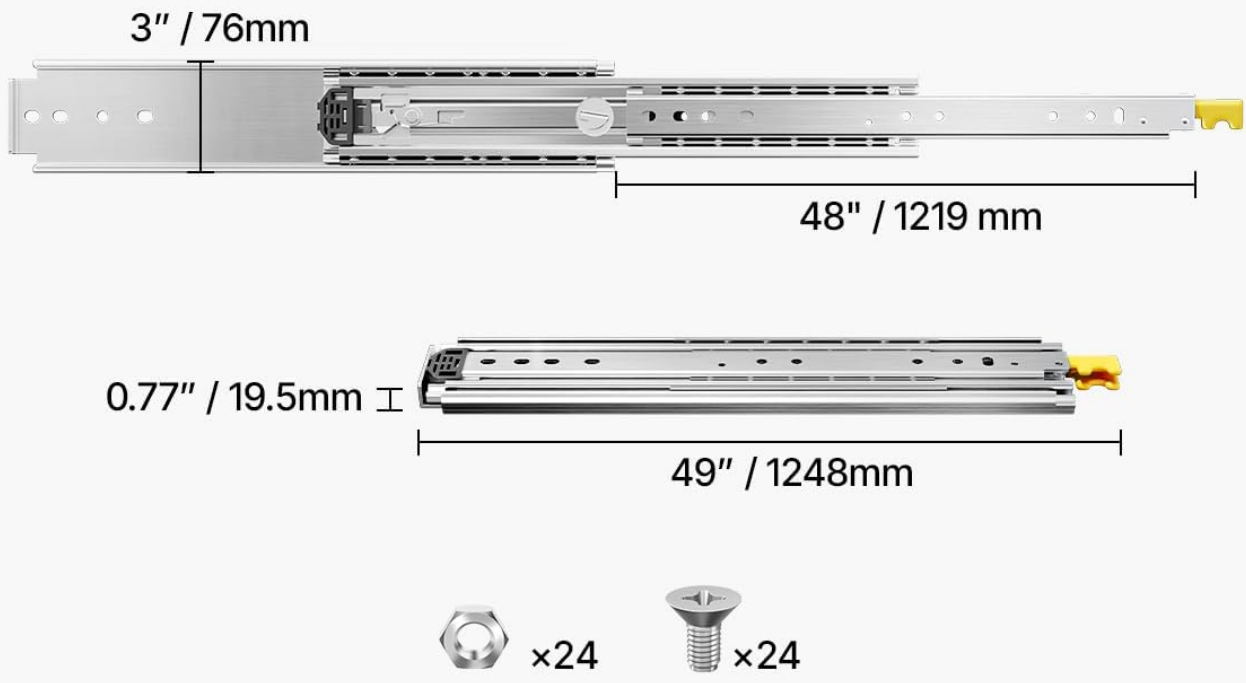

Item Model Number:	7601Z-48"
Load Capacity:	500 lbs / 226.8 kg
Load Capacity (Fully Extended):	243 lbs / 110.22 kg
Suitable Drawer Length:	48.5" / 1231 mm
Extension Length:	48" / 1219 mm
Net Weight:	26.9 lbs / 12.2 kg
Product Dimensions:	49 × 3 × 0.77" / 1248 × 76 × 19.5 mm
Accessories:	24 x Screws 24 x Nuts

Image: Detailed view of the drawer slide mechanism, highlighting the solid steel ball bearings for smooth movement and the nylon pad for quiet operation.

▶ **Watch video online**
Heavy Duty Drawer Slides

Video: An official product video demonstrating the installation and smooth operation of the VEVOR Heavy Duty Drawer Slides in a vehicle storage application.

Maintenance

Regular maintenance ensures the longevity and optimal performance of your drawer slides.

- **Cleaning:** Periodically clean the slides to remove dust, dirt, and debris that may accumulate in the ball bearing tracks. Use a clean cloth and a mild cleaner if necessary.
- **Lubrication:** While the ball bearings are designed for smooth operation, a light application of silicone-based lubricant can be applied to the tracks if movement becomes stiff over time. Avoid oil-based lubricants that can attract dirt.
- **Inspection:** Regularly check for any loose screws or signs of wear. Tighten any loose fasteners immediately.
- **Rust Prevention:** The galvanized finish provides rust resistance. However, in highly corrosive environments, additional protective measures may be considered.

Troubleshooting

If you encounter issues with your drawer slides, refer to the following common problems and solutions:

Problem	Possible Cause	Solution
Drawer does not slide smoothly.	Dirt or debris in tracks; lack of lubrication; misalignment.	Clean tracks thoroughly. Apply a light silicone lubricant. Check and adjust alignment of slides.
Locking mechanism not engaging.	Drawer not fully closed or fully extended; obstruction.	Ensure drawer is pushed completely in or pulled completely out. Check for any objects blocking the lock.
Drawer feels loose or wobbly.	Loose mounting screws; slides not properly seated.	Tighten all mounting screws. Ensure inner and outer slide members are correctly engaged.
Drawer is difficult to open or close.	Overloaded drawer; misalignment; damaged slides.	Reduce weight in the drawer. Check alignment. If slides are damaged, replacement may be necessary.

Specifications

The following are the technical specifications for the VEVOR 48 Inch 500 lb Heavy Duty Drawer Slides (Model: 7601Z-48").

Item Model Number: 7601Z-48"

Load Capacity: 500 lbs / 226.8 kg

Load Capacity (Fully Extended): 243 lbs / 110.22 kg

Material: Alloy Steel

Finish Type: Galvanized

Product Dimensions (L x W x Thickness): 49" x 3" x 0.77" / 1248 x 76 x 19.5 mm

Extension Length: 48" / 1219 mm

Suitable Drawer Length: 48.5" / 1231 mm

Net Weight: 26.9 lbs / 12.2 kg (per pair)

Included Components: 24 x Screws

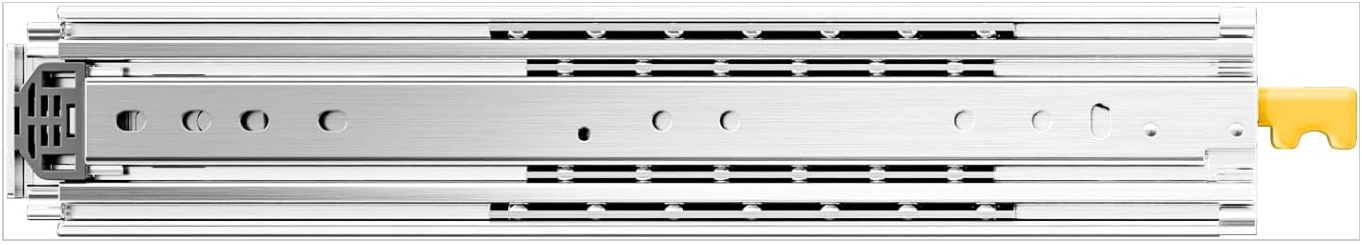

Image: A detailed diagram showing the various dimensions and specifications of the 48-inch drawer slides, including length, width, and thickness.

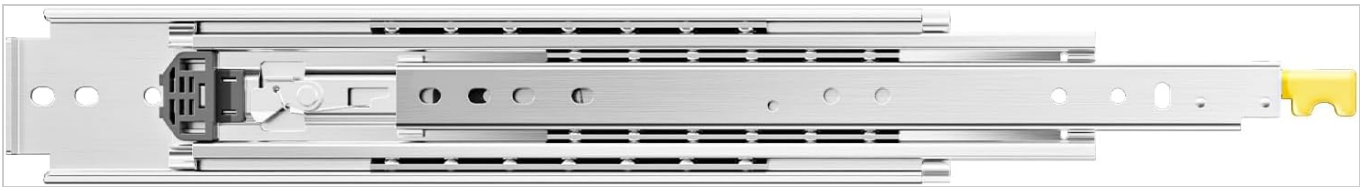

Image: The complete package contents, including one pair of VEVOR 48-inch heavy-duty drawer slides and the accompanying 24 screws and nuts for installation.

Warranty & Support

For warranty information, technical support, or any inquiries regarding your VEVOR product, please contact VEVOR customer service. Refer to your purchase documentation for specific warranty terms and contact details.
You can also visit the official VEVOR store for more information and product resources:**VEVOR Store on Amazon**

© 2026 VEVOR. All rights reserved.

Ask a question about this manual

Ask about setup, troubleshooting, compatibility, parts, safety, or missing instructions. Manuals+ will review the question and use this page's manual context to help answer it.

Name

Anonymous

Email

you@example.com

After a successful submission, we securely hash the supplied account or form email before sending it to Microsoft Advertising for conversion attribution. Privacy details.

Question

Example: How do I reset this device or fix this error?

Details

Model number, symptoms, what you tried, or the section of the manual you are using.

Submit question

Open the live page

https://manuals.plus/asin/B0DZ22HQW9

More documents and user manuals: **https://manuals.plus/**