Saved from manuals.plus.
Open the live page for links to other documents and user manuals.

VOWNER VOWNER-366

VOWNER Shoe Bench with 2 Flip Drawers

INSTRUCTION MANUAL

1. Introduction

Thank you for choosing the VOWNER Shoe Bench. This manual provides detailed instructions for the assembly, operation, and maintenance of your new shoe bench. Please read this manual thoroughly before assembly and use to ensure proper function and longevity of the product. This shoe bench is designed to offer a practical and stylish storage solution for your entryway, hallway, or living room, combining shoe storage with a comfortable seating area.

Key Features:

- **Flip Drawer Shoe Storage:** Features 2 flip drawers with adjustable shelves to accommodate various shoe sizes.
- **Padded Seat:** A thick, soft fabric cushion provides a comfortable seating experience.
- **Space-Saving Design:** Ideal for narrow spaces, offering ample storage for approximately 8-10 pairs of shoes.
- **Multi-functional Use:** Serves as both a shoe rack and a comfortable bench for changing shoes.

2. Safety Information

Please observe the following safety guidelines to prevent injury or damage to the product:

- Always assemble the product on a clean, flat, and stable surface to prevent scratching or damage.
- Ensure all screws and fasteners are securely tightened before use. Periodically check and re-tighten as necessary.
- Do not exceed the maximum weight capacity of the bench. While designed for seating, excessive weight can cause damage.
- Keep small parts and packaging materials away from children and pets to avoid choking hazards.
- Do not stand on the bench or use it as a step stool.
- Avoid placing hot items directly on the surface without protection.

3. Package Contents

Before beginning assembly, please verify that all parts and hardware are present and undamaged. Refer to the included assembly diagram for a complete list of components. If any parts are missing or damaged, please contact customer support.

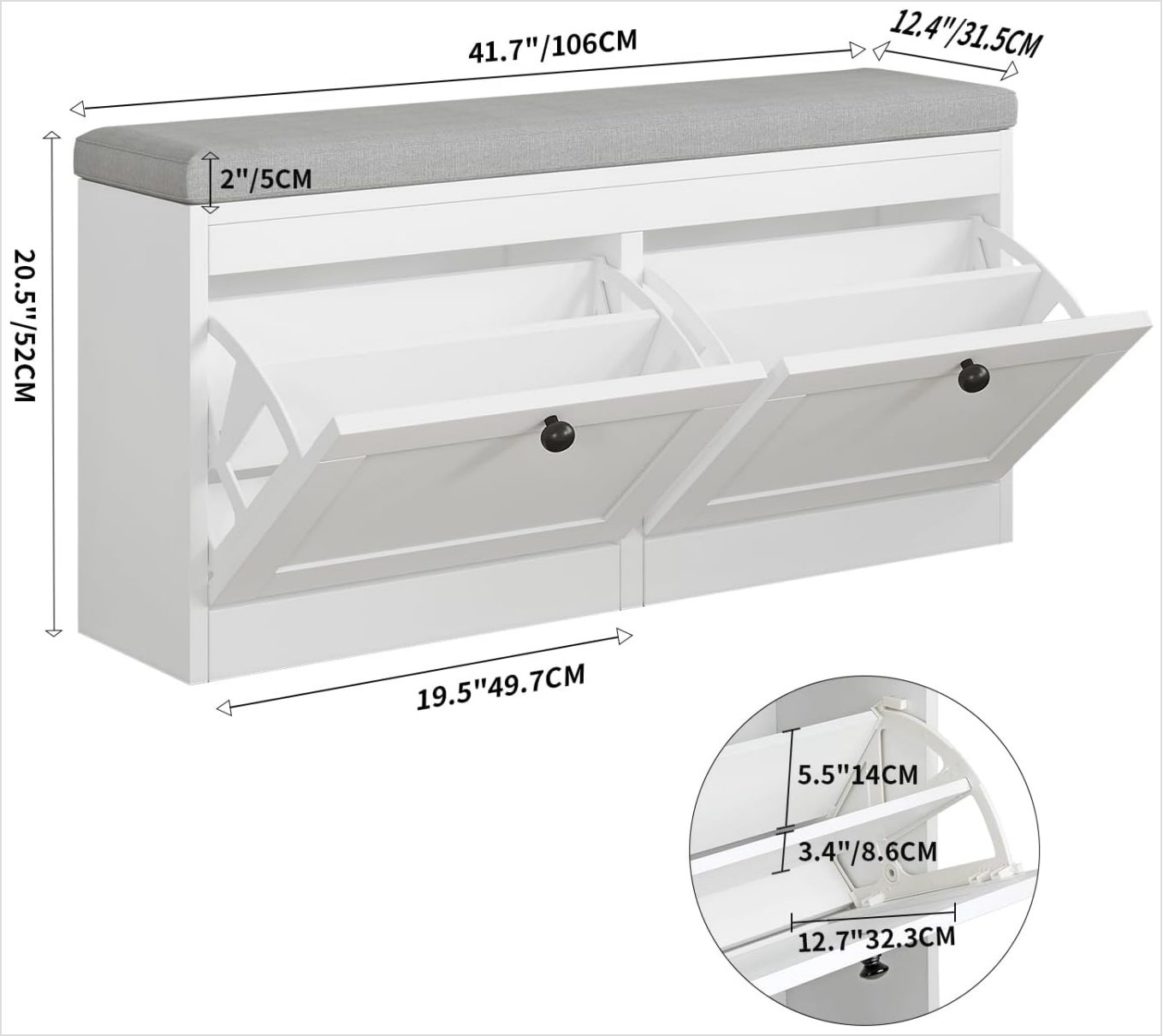

Figure 3.1: Product Dimensions and Internal Drawer View

This image illustrates the overall dimensions of the shoe bench, including its width, depth, and height, along with the thickness of the padded cushion. An additional detailed view highlights the internal measurements of the flip drawers, providing clarity on the available space for shoe storage.

4. Setup and Assembly

The VOWNER Shoe Bench is designed for easy assembly. Follow the detailed installation diagrams and numbered parts provided in the separate assembly guide included with your product. Typically, assembly can be completed in a short amount of time with basic household tools (e.g., screwdriver).

1. **Unpack Components:** Carefully remove all parts from the packaging and lay them out on a soft, clean surface to prevent scratches.
2. **Identify Parts:** Match each part to the corresponding number in the assembly guide.
3. **Follow Step-by-Step Instructions:** Assemble the frame, then attach the flip drawers and their mechanisms. Finally, place the padded cushion on top.
4. **Secure All Fasteners:** Ensure all screws and connectors are tightened firmly for stability. Do not overtighten.



Figure 4.1: Key Product Features Overview

This image provides a visual overview of the shoe bench's main features, including the design of the easy-to-pull handles on the flip drawers, the practical nature of the storage compartments, the comfortable padded seat, and the mechanism of the flip-out drawers.

5. Operating Instructions

Using your VOWNER Shoe Bench is straightforward:

- **Accessing Shoes:** Gently pull the handle on the front of each drawer to flip it open. The drawers are designed for smooth operation.
- **Adjusting Shelves:** The shelves within each flip drawer can be removed or adjusted to two different positions. This allows you to customize the storage space for various shoe types, from flats to taller boots. To adjust, simply lift the shelf and reposition it into the desired slots.
- **Seating:** The top of the bench features a thick, soft fabric cushion. Use this area for comfortable seating while putting on or taking off shoes.
- **Shoe Capacity:** The bench is designed to store approximately 8-10 pairs of shoes, depending on their size and style. For larger shoe sizes (e.g., US men's size 12), shoes may need to be angled slightly to allow the drawer to close properly.



Figure 5.1: Adjustable Shelf Mechanism

This image provides a detailed view of one of the flip drawers, specifically highlighting the two available positions for the internal shelf. This adjustability allows users to optimize the storage space for various shoe heights, from low-profile footwear to slightly taller items.



Figure 5.2: Bench in Use for Seating

This image shows an individual comfortably seated on the VOWNER Shoe Bench, in the process of tying their shoelaces. It effectively demonstrates the practical utility of the bench as a convenient and comfortable seating area, particularly useful in an entryway or hallway.

6. Maintenance

To keep your VOWNER Shoe Bench in optimal condition:

- **Cleaning the Bench:** Wipe the wooden surfaces with a soft, damp cloth. Avoid using harsh chemicals or abrasive cleaners, which can damage the finish.
- **Cushion Care:** The linen fabric cushion is detachable for easier cleaning. Spot clean with a mild detergent and water, or follow specific fabric care instructions if provided on the cushion tag. Allow to air dry completely before reattaching.
- **Regular Checks:** Periodically inspect all hardware and connections to ensure they remain tight. Re-tighten any loose screws to maintain stability.



Figure 6.1: Detachable Linen Cushion Detail

This image provides a close-up view of the shoe bench's comfortable, detachable linen cushion. It emphasizes the cushion's key attributes: durability, comfort, and breathability, indicating its quality and ease of maintenance.

7. Troubleshooting

If you encounter any issues with your VOWNER Shoe Bench, consider the following common solutions:

- **Drawers Not Closing Properly:** Ensure that shoes are placed correctly within the drawers and are not obstructing the closing mechanism. For larger shoe sizes, try angling the shoes slightly to allow the drawer to close fully. Verify that the adjustable shelves are correctly seated in their positions.
- **Bench Feels Unstable:** Check all assembly screws and fasteners. Tighten any that are loose. Ensure the bench is placed on a flat, level surface.
- **Scratches or Dents:** Minor imperfections can sometimes be touched up with furniture repair markers or kits matching the white finish.

If problems persist after attempting these solutions, please contact VOWNER customer support for further assistance.

8. Specifications

Product Dimensions	12.4"D x 41.7"W x 20.5"H
Item Weight	41.8 pounds
Manufacturer	VOWNER
Model Number	VOWNER-366
Color	White
Furniture Finish	MDF

9. Warranty and Support

For information regarding warranty coverage, returns, or additional product support, please refer to the purchase documentation or contact VOWNER customer service directly. You can often find contact information on the VOWNER brand store page or through the retailer where the product was purchased.

VOWNER Brand Store: Visit the VOWNER Store on Amazon

© 2025 VOWNER. All rights reserved.

Ask a question about this manual

Ask about setup, troubleshooting, compatibility, parts, safety, or missing instructions. Manuals+ will review the question and use this page's manual context to help answer it.

Name

Anonymous

Email

you@example.com

After a successful submission, we securely hash the supplied account or form email before sending it to Microsoft Advertising for conversion attribution. Privacy details.

Question

Example: How do I reset this device or fix this error?

Details

Model number, symptoms, what you tried, or the section of the manual you are using.

Submit question

Open the live page

https://manuals.plus/asin/B0DYDSJM7G

More documents and user manuals: **https://manuals.plus/**