Saved from manuals.plus.
Open the live page for links to other documents and user manuals.

HZSSDTKJ Daybed

User Manual: Full Size Daybed with Hydraulic Bed and All-in-One Cabinet and Shelf

Brand: HZSSDTKJ | Model: Daybed

Product Overview

This Full Size Daybed with Hydraulic Bed and All-in-One Cabinet and Shelf is designed to provide both comfortable sleeping space and extensive storage solutions. Its modern wooden design integrates seamlessly into various room decors, making it a versatile addition to bedrooms or living rooms.
The bed features a hydraulic lift mechanism for easy access to under-bed storage, and an integrated headboard with shelves and cabinets for additional organization.



Image: Front view of the Full Size Daybed, showcasing its integrated cabinet and shelf headboard, and the bed frame.

Setup and Assembly

Your daybed requires assembly. Please ensure all components are present before beginning. The package includes the bed frame, necessary hardware, and a detailed manual to guide you through the assembly process.

Before You Begin:

- **Unpack Carefully:** Remove all parts from the packaging and lay them out on a clean, soft surface to prevent scratches.
- **Identify Components:** Refer to the parts list in the included manual to identify each piece.
- **Gather Tools:** Ensure you have any additional tools required, though most necessary tools are typically provided.
- **Two-Person Assembly:** For safety and ease, it is recommended that two adults assemble this daybed.

Assembly Steps:

1. Begin by assembling the main bed frame components, including the side rails and end panels.

2. Attach the slat support system to the bed frame. Ensure all slats are securely fastened to provide proper mattress support.
3. Assemble the headboard unit, including the shelves and cabinet doors.
4. Carefully attach the assembled headboard to the bed frame.
5. Install the hydraulic lift mechanism according to the instructions, ensuring it operates smoothly and safely.
6. Place your mattress on the assembled bed frame. No box spring is needed due to the robust slat support.



Image: View of the bed frame interior, showing the slat support system and the hydraulic lift components before mattress placement.

Operating Instructions

This daybed is designed for both comfort and efficient storage. Understanding its features will help you maximize its utility.

Hydraulic Storage Access:

- To access the storage space beneath the bed, gently lift the mattress platform from the foot end. The hydraulic mechanism will assist in lifting and holding the platform securely in an open position.
- Place items into the spacious compartments. The design allows for organized storage of bedding, seasonal

clothing, or other personal belongings.

- To close, gently push the mattress platform down until it latches securely. Ensure no items obstruct the closing mechanism.



Image: The daybed with its mattress platform lifted, showcasing the ample storage space underneath, accessible via the hydraulic system.



Image: A detailed view of the hydraulic piston and support structure, demonstrating the lifting mechanism.

Cabinet and Shelf Usage:

- The integrated headboard features open shelves and closed cabinets.
- Use the open shelves for displaying decorative items, books, or frequently accessed personal items.
- The cabinets provide concealed storage for items you wish to keep out of sight, helping maintain a tidy appearance.



Image: The daybed's headboard, featuring various open shelves for display and closed cabinets for discreet storage.

Maintenance and Care

Proper care will ensure the longevity and appearance of your daybed.

- **Cleaning:** Wipe the wooden surfaces with a dry cloth to remove dust and light dirt. Avoid using harsh chemicals or abrasive cleaners, which can damage the finish.
- **Spills:** In case of spills, wipe immediately with a clean, dry cloth.
- **Hardware Check:** Periodically check all screws and fasteners to ensure they are tight. Re-tighten if necessary to maintain stability and prevent squeaking.
- **Hydraulic Mechanism:** The hydraulic system is designed for durability. Avoid forcing the mechanism. If it feels stiff, ensure no obstructions are present. Do not attempt to lubricate or disassemble the hydraulic pistons yourself.
- **Environmental Conditions:** Avoid placing the daybed in direct sunlight or near heat sources, as this can cause wood to warp or fade. Maintain a stable room temperature and humidity.

Troubleshooting

If you encounter any issues with your daybed, please refer to the following common solutions before contacting support.

Problem	Possible Cause	Solution
Bed feels unstable or wobbly.	Loose hardware or incorrect assembly.	Check all screws and bolts and tighten them securely. Refer to the assembly manual to ensure all parts are correctly installed.
Squeaking noises from the bed.	Loose connections or friction between parts.	Ensure all hardware is tightened. The solid wood slats are designed to minimize noise; verify they are properly seated.
Hydraulic lift mechanism is difficult to operate.	Obstruction in the storage area or mechanism.	Ensure the storage area is clear of items that might impede the lift. Do not force the mechanism. If the issue persists, contact customer support.
Cabinet doors do not close properly.	Misaligned hinges or obstruction.	Check hinges for proper alignment and tighten screws if loose. Ensure nothing inside the cabinet is blocking the door.

Product Specifications

Detailed specifications for your Full Size Daybed:

Product Type: Daybed

Size: Full

Color: Gray-07

Material: Plywood + MDF + Pinewood

Overall Product Dimension: 79.8"L x 56.4"W x 74.8"H

Weight Capacity: 600 lbs

Recommended Mattress Thickness: 6-8 inches

Item Weight: 221.2 Pounds

Assembly Required: Yes

Included Components: Bed Frame, Hardware, Manual

Country of Origin: Vietnam

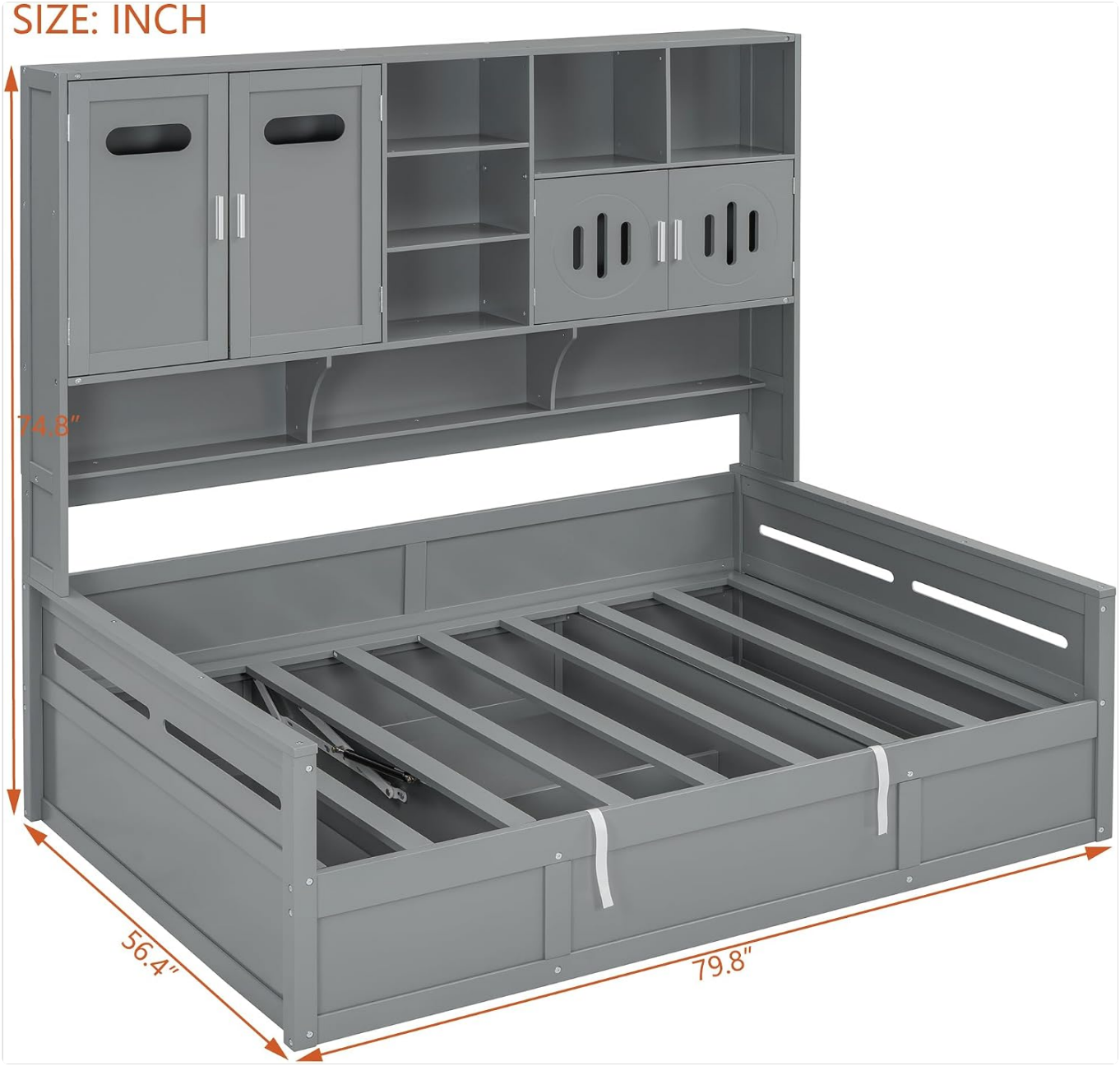

Image: Dimensional diagram of the daybed, indicating length, width, and height measurements.

Warranty and Support

While specific warranty details are not provided in this manual, we are committed to your satisfaction. If you encounter any issues or have questions regarding your HZSSDTKJ Full Size Daybed, please do not hesitate to contact our customer support team.

For assistance, please refer to the contact information provided at the point of purchase or on the product packaging. Our team is ready to help resolve any problems you may experience.

Manufacturer: Yitong Store

© 2025 HZSSDTKJ. All rights reserved.

Ask a question about this manual

Ask about setup, troubleshooting, compatibility, parts, safety, or missing instructions. Manuals+ will review the question and use this page's manual context to help answer it.

Name

Anonymous

Email

you@example.com

After a successful submission, we securely hash the supplied account or form email before sending it to Microsoft Advertising for conversion attribution. Privacy details.

Question

Example: How do I reset this device or fix this error?

Details

Model number, symptoms, what you tried, or the section of the manual you are using.

Submit question

Open the live page

https://manuals.plus/asin/B0DWLJ31TQ

More documents and user manuals: **https://manuals.plus/**