Brrnoo Brrnoo9dzwp7oyfa-US

Brrnoo LED Aquarium Light Instruction Manual

Model: Brrnoo9dzwp7oyfa-US

Introduction

This manual provides detailed instructions for the installation, operation, and maintenance of your Brrnoo LED Aquarium Light. This 18W full spectrum light is designed to promote healthy plant growth and provide optimal lighting conditions for your fish, featuring adjustable brightness, multiple color modes, and a timer function.

Image: Brrnoo LED Aquarium Light illuminating a planted aquarium, showcasing its full spectrum capabilities.

Safety Information

- Always disconnect the power supply before performing any maintenance or installation.
- Ensure the power adapter and controller are kept dry and away from water.
- Do not operate the light if any part is damaged. Contact support for assistance.
- This product is designed for indoor aquarium use only.
- Keep out of reach of children.

Package Contents

Verify that all items are present in the package:

- 1 x Fish Tank Light
- 2 x Brackets
- 1 x Power Adapter
- 1 x Manual (this document)

Specifications

Rated Power:	18W
Power Output:	DC 12V 1.5A
Light Beads:	33 LEDs (2 Red, 2 Blue, 2 Green, 2 Purple, 16 White, 9 5050RGB)
Item Size (Light Body):	Approx. 45 x 8 x 5.3 cm (17.71 x 3.15 x 2.08 inches)
Adjustable for Tank Size:	45-60 cm (17.7-23.6 inches)
Material:	Aluminum shell (for efficient heat dissipation)
Model Name:	Brrnoo9dzwp7oyfa-US

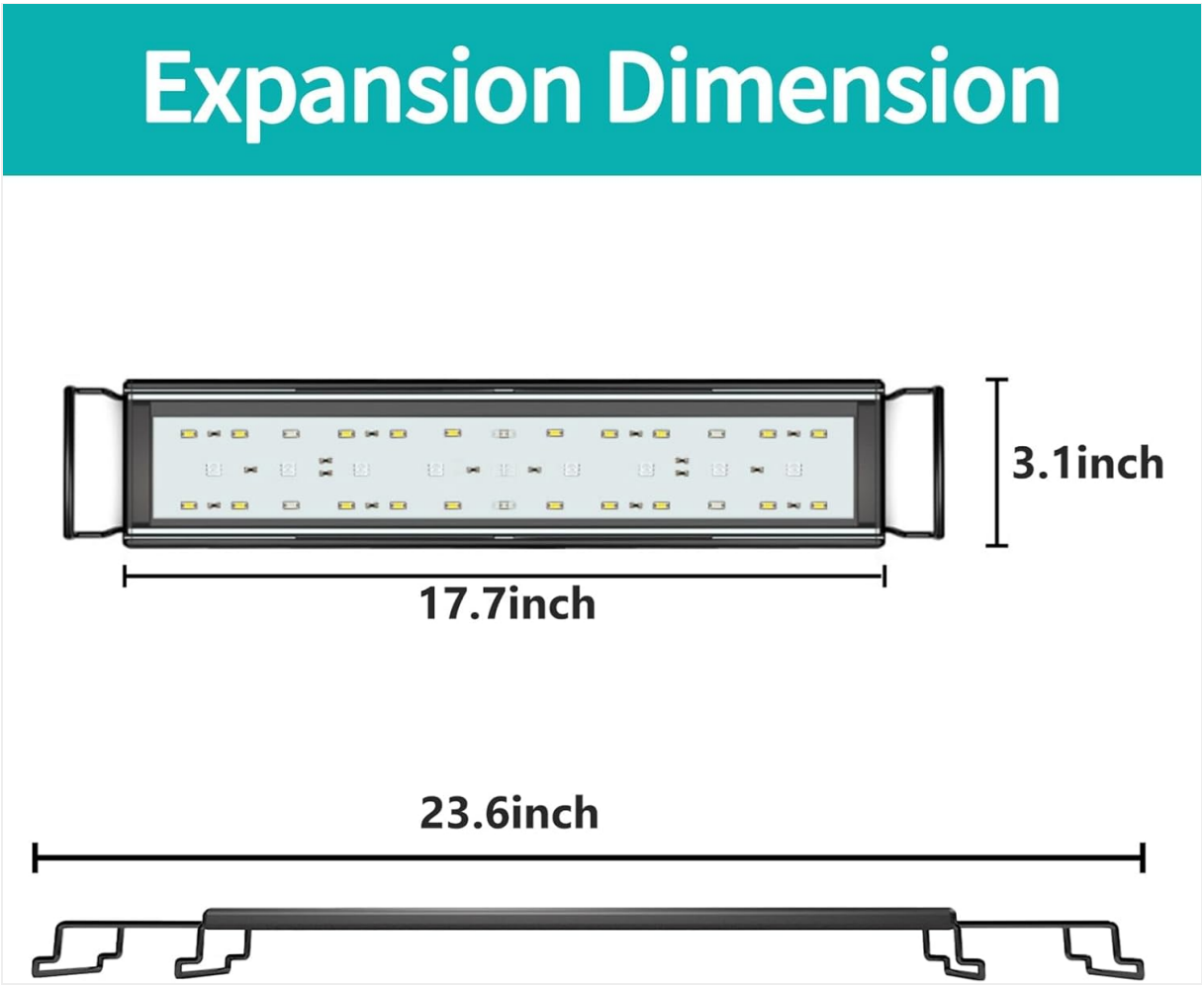

Image: Expansion dimensions of the light, showing 17.7 inches for the light body and up to 23.6 inches with brackets extended.

Setup

1. **Attach Brackets:** Slide the adjustable clamps onto both ends of the light fixture.
2. **Position on Tank:** Place the light fixture on top of your aquarium. Adjust the extendable brackets to fit tanks ranging from 45-60cm (17.7-23.6 inches) securely.
3. **Connect Power:** Plug the power adapter into the light's controller, then plug the adapter into a suitable power outlet. Ensure all connections are dry.

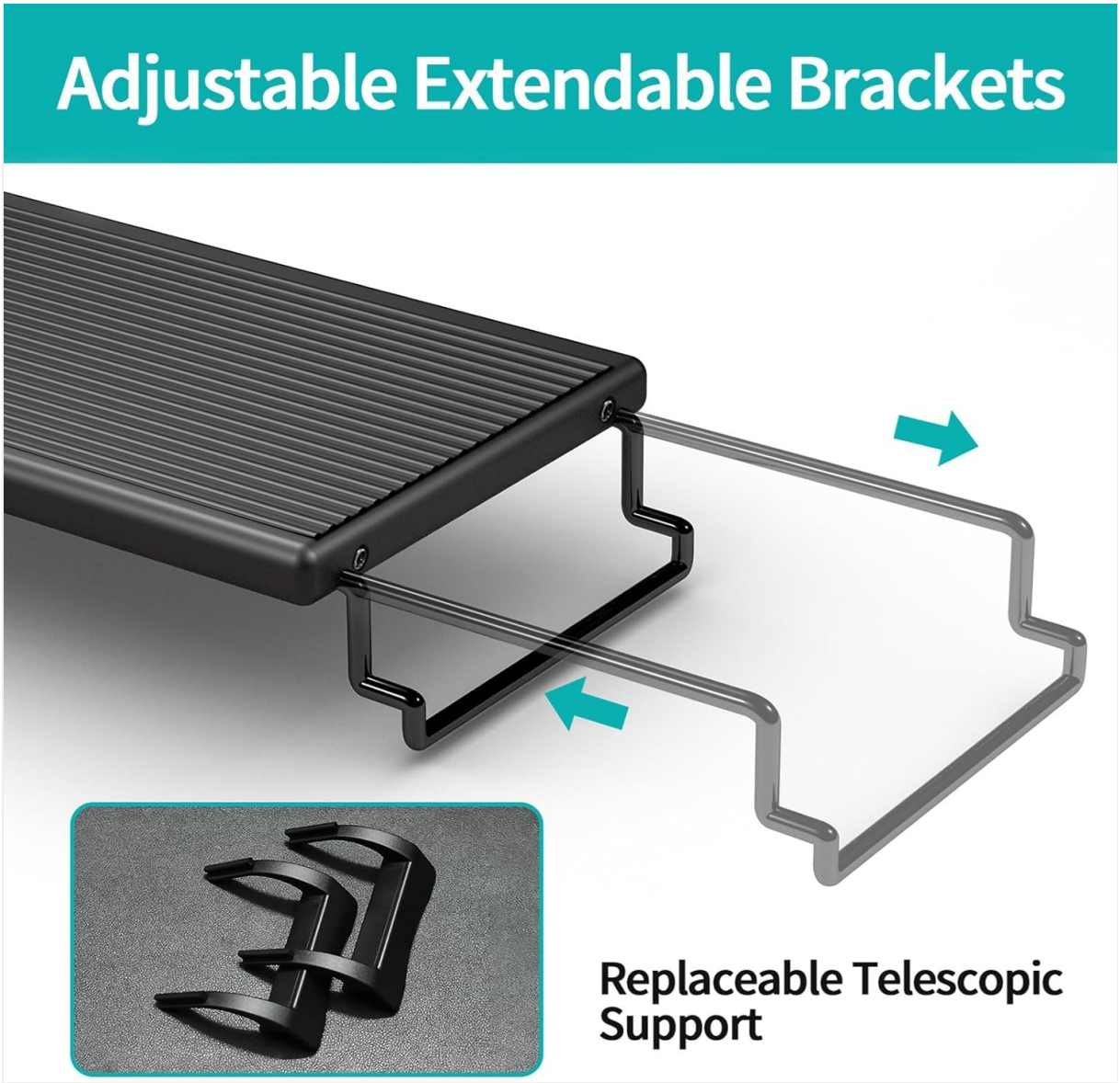

Image: Detail of the adjustable extendable brackets, illustrating how they slide to fit various tank sizes.

Operating Instructions

The external controller allows for comprehensive management of your aquarium light settings.

Image: Multi-function controller with labels for brightness adjustment, timer setting, color control, and automatic mode.

1. Brightness Adjustment

Use the **+** and **-** buttons on the controller to adjust the light intensity. There are 10 adjustable brightness levels (10% to 100%) to suit your aquarium's needs.

2. Color Modes

Press the **M** button to cycle through various color modes. Available colors include Red, Blue, Green, Deep Red, Orange, Cyan, and a Gradient mode. Select the mode that best enhances your aquatic environment.

3. Timer Function

The built-in timer allows for automated lighting cycles:

- **Fixed Duration:** Press the **4H**, **8H**, or **12H** buttons to set the light to run for 4, 8, or 12 hours respectively.
- **24/7 Automatic Sunlight Simulation:** Press the **ATUO** button. You can set the starting time to 9 am, 12 pm, 3 pm, 6 pm, or 9 pm. The light will automatically simulate a natural day-night cycle and turn off at midnight.

Maintenance

- **Cleaning:** Regularly wipe the light fixture with a soft, dry cloth to remove dust and water spots. Ensure the light is unplugged before cleaning. Do not use abrasive cleaners.
- **Heat Dissipation:** The aluminum shell is designed for efficient heat dissipation. Ensure the light is not covered or obstructed to allow for proper airflow, which prolongs LED lifespan.
- **Inspection:** Periodically check the power cord and adapter for any signs of damage.

Troubleshooting

- **Light Not Turning On:**
  - Check if the power adapter is securely plugged into both the light controller and the wall outlet.
  - Ensure the power outlet is functional.
  - Verify that the light is not set to an "off" timer mode.
- **Controller Not Responding:**
  - Unplug the power adapter, wait 30 seconds, then plug it back in to reset the controller.
- **Inconsistent Lighting:**
  - Ensure the timer settings are configured correctly for your desired schedule.
  - Check for any loose connections.

If you encounter issues not listed here, please contact customer support.

Warranty and Support

Warranty Information: No specific warranty information is provided in the product details. Please refer to your purchase documentation or contact the seller for warranty terms.
Customer Support: For technical assistance, troubleshooting, or inquiries regarding your Brrnoo LED Aquarium Light, please contact the manufacturer or seller through the platform where the product was purchased.