Merax Herringbone Single Sink Bathroom Vanity 30 Inch

Merax Herringbone 30 Inch Single Sink Bathroom Vanity

Instruction Manual

1. Safety Information

Please read all instructions carefully before assembly and use. Keep this manual for future reference.

- Always unplug and turn off power to water supply before installation.
- Use appropriate safety gear when handling sharp objects and working in tight spaces.
- Secure the vanity to the wall to prevent tip-over.
- Do not overload the vanity; it is not designed to support excessive weight.

2. Product Overview

The Merax Herringbone 30 Inch Single Sink Bathroom Vanity is designed to provide both style and functionality to your bathroom. It features a modern design with classic herringbone patterns, ample storage, and durable construction.

Image 2.1: The Merax Herringbone 30 Inch Single Sink Bathroom Vanity in Black, showcasing its elegant design and integrated sink.

Key Features:

- **Elegant Design:** Features clean lines and classic herringbone patterns.
- **Versatile Storage:** Includes two soft-close doors and three fully extending drawers for organized storage.
- **Durable Construction:** Crafted from TSCA compliant MDF with a solid wood frame for lasting beauty.
- **Integrated Sink Top:** 30-inch white vanity top with 3 pre-drilled holes for a 4-inch faucet (faucet not included) and an overflow drain.

Image 2.2: Visual representation of key features including solid wood frame, high-quality MDF board, painted finish, and ample storage space.

Image 2.3: Details on soft-closing hinges for noise reduction, easy-to-clean and scratch-resistant surface, and smooth drawer slide rails.

Image 2.4: Detailed view of the glossy ceramic basin, highlighting the anti-spill hole and the pre-drilled 4-inch centerset faucet holes.

3. Dimensions

Refer to the diagram below for detailed product dimensions.

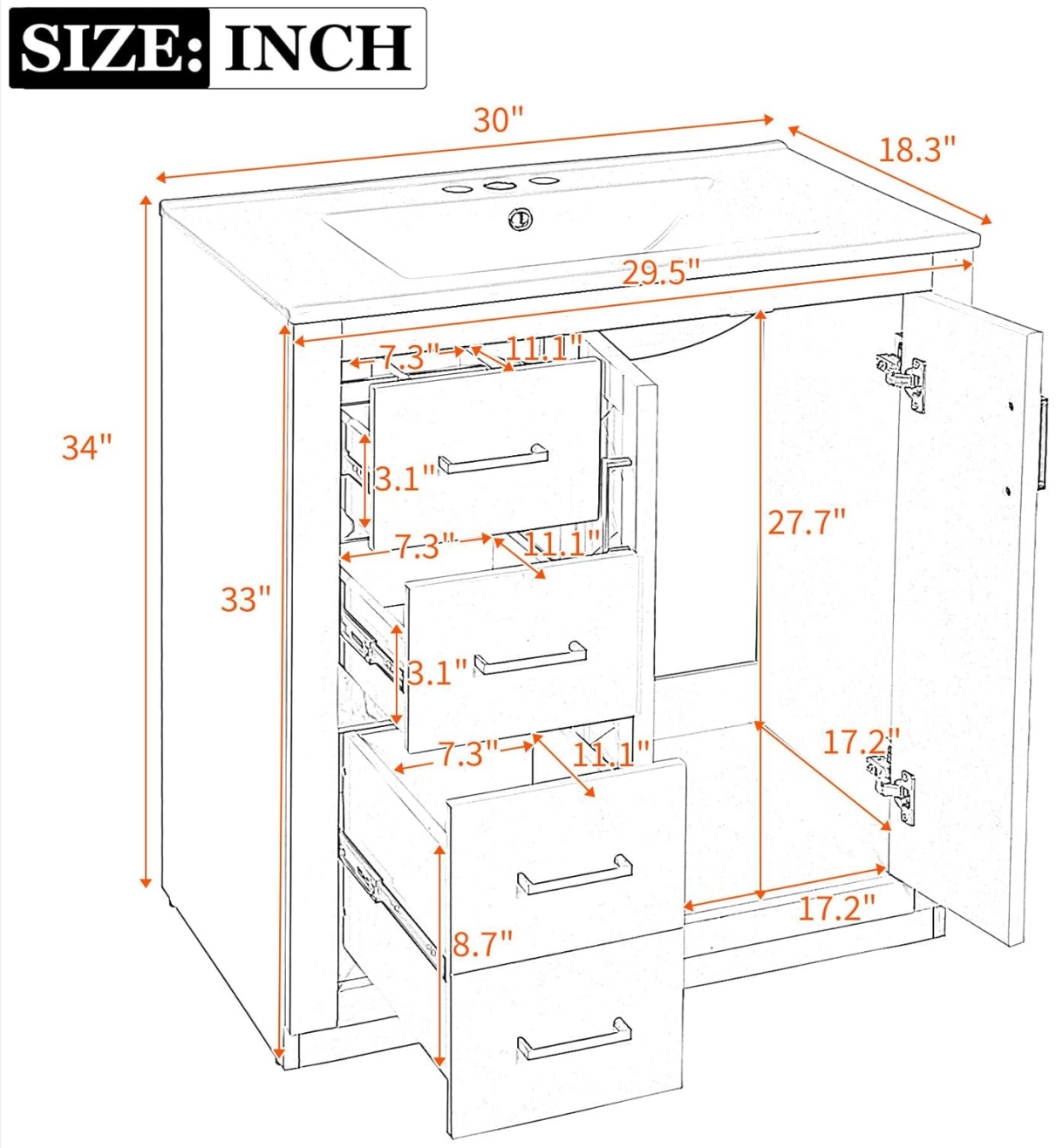

Image 3.1: Technical drawing showing the overall dimensions and internal measurements of the vanity, including height, width, and depth in inches.

- Overall Dimensions: 30"W x 18.3"D x 34"H
- Sink Top Width: 30"
- Sink Top Depth: 18.3"
- Vanity Height (excluding sink): 33"

4. Setup and Assembly

The Merax Herringbone Bathroom Vanity requires assembly. Detailed instructions and labeled parts are included in the packaging to facilitate the process.

General Assembly Steps:

1. **Unpack Components:** Carefully remove all parts from the packaging and verify against the included parts list.
2. **Assemble Frame:** Follow the step-by-step diagrams to assemble the main cabinet frame.

3. **Install Drawers and Doors:** Attach the drawer slides and hinges, then install the drawers and doors. Ensure soft-close mechanisms are functioning correctly.
4. **Place Sink Top:** Carefully position the ceramic sink top onto the cabinet.
5. **Connect Plumbing:** Utilize the large cutout on the back panel for easy plumbing access. Connect water supply lines and drain according to local codes.
6. **Secure to Wall:** For stability and safety, secure the vanity to the wall using appropriate hardware (not always included, check package contents).

Image 4.1: Internal view of the vanity cabinet, illustrating the spacious area for plumbing and the structure of the drawer compartments.

5. Operation

This section provides guidance on the proper use of your bathroom vanity.

Using Storage Compartments:

- **Drawers:** The three fully extending drawers provide organized storage for smaller items. The bottom

drawer is deeper, suitable for taller items like hairdryers.

- **Cabinet:** The two doors open to a spacious cabinet area, ideal for larger toiletries, towels, or cleaning supplies.
- **Soft-Close Mechanism:** Both doors and drawers are equipped with soft-close hinges and smooth ball-bearing glides to prevent slamming and ensure quiet operation.

Image 5.1: The vanity with its drawers and cabinet doors open, demonstrating the ample and organized storage capacity for various bathroom essentials.

Sink Usage:

- The integrated ceramic sink is designed for daily use. Ensure the faucet (not included) is properly installed and sealed to prevent leaks.
- The overflow drain helps prevent water spillage if the sink is overfilled. Regularly check and clean the overflow opening to ensure it remains clear.

6. Maintenance and Care

Proper maintenance will ensure the longevity and appearance of your vanity.

Cleaning Instructions:

- **Cabinet Surface:** Wipe the cabinet surfaces with a soft, damp cloth. Avoid abrasive cleaners or harsh chemicals that can damage the finish.
- **Sink:** Clean the ceramic sink with mild soap and water. For stubborn stains, use a non-abrasive bathroom cleaner. Rinse thoroughly after cleaning.
- **Hardware:** Periodically wipe down the drawer pulls and door handles with a soft cloth to maintain their shine.

General Care:

- Avoid placing excessively hot or heavy objects directly on the vanity top.
- Promptly wipe up any spills to prevent water damage or staining.
- Ensure the bathroom is well-ventilated to prevent moisture buildup, which can affect wood products.

7. Troubleshooting

This section addresses common issues you might encounter.

Problem	Possible Cause	Solution
Drawer sticks or does not close smoothly.	Misaligned slides, obstruction, or loose hardware.	Check that the drawer slides are properly aligned and secured. Remove any obstructions. Tighten all screws on the slides.
Cabinet door does not close properly or is misaligned.	Loose hinges, misaligned hinges, or obstruction.	Adjust the screws on the hinges to align the door. Ensure no items inside the cabinet are blocking the door's path.
Sink drains slowly.	Partial clog in the drain or P-trap.	Remove the drain stopper and clear any hair or debris. If necessary, disassemble and clean the P-trap.
Water leaks from faucet base or drain.	Loose connections or worn seals.	Turn off water supply. Tighten all connections. Replace worn washers or seals if needed. Consult a plumber if unsure.

8. Specifications

Feature	Detail
Brand	Merax
Model Name	Herringbone Single Sink Bathroom Vanity
Color	Black
Material	Engineered Wood (TSCA compliant MDF), Solid Wood Frame
Product Dimensions (D x W x H)	18.3" x 30" x 34"
Top Material Type	Ceramic
Installation Type	Freestanding
Mounting Type	Floor Mount (Wall securing recommended)

Feature	Detail
Number of Drawers	3
Number of Doors	2
Faucet Holes	3 pre-drilled for 4" centerset faucet
Assembly Required	Yes (Instructions Included)
UPC	196986454286
ASIN	B0DMDSH1K9

9. Warranty and Support

For specific warranty information and customer support, please refer to the documentation included with your purchase or contact Merax customer service directly. Protection plans may be available for extended coverage.

Manufacturer: Merax

Contact: Please visit the official Merax website or refer to your purchase receipt for contact details.