Manuals+
Q & A | Deep Search | Upload

VCELINK A181+A182

VCELINK 2 Gang Brush Wall Plate User Manual

Model: A181+A182
Brand: VCELINK

1. Introduction

The VCELINK 2 Gang Brush Wall Plate is designed to provide a clean and organized solution for routing low-voltage cables through walls. It effectively conceals cables, reducing clutter and enhancing the aesthetic of your living or working space. The integrated brush design helps prevent dust and pests from entering the wall cavity while protecting cables from damage.

2. Safety Information

- This product is intended for **low-voltage cables only**. Do not use for high-voltage electrical wiring (e.g., AC power cords).
- Ensure power is turned off at the circuit breaker before cutting into any wall to avoid electrical shock.
- Always check for studs, pipes, and existing electrical wires behind the wall before cutting. Use a stud finder and appropriate tools.
- Wear appropriate safety gear, including eye protection and gloves, during installation.
- If you are unsure about any part of the installation process, consult a qualified electrician or professional installer.

3. Package Contents

Each package includes the following components:

- 2 × 2 Gang Brush Faceplates (White)
- 2 × Mounting Brackets (Black)
- Mounting Screws

This image displays the complete package contents: two white brush wall plates and two black mounting brackets, ready for installation.

4. Specifications

Feature	Specification
Brand	VCELINK
Model Number	A181+A182
Material	Nylon, Polycarbonate (PC)
Color	White, with Bracket
Product Dimensions	4.57"W x 4.51"H (116.0 mm x 114.5 mm)
Cable Opening Dimensions	3.31"W x 2.24"H (84.0 mm x 57.0 mm)
Finish Type	Polished
Configuration	Double Gang
Installation Type	Screw-In
Item Weight	6.1 ounces (0.38 Pounds)

How to Install

1. Use the 4 Corner Holes to Mark Wall Opening

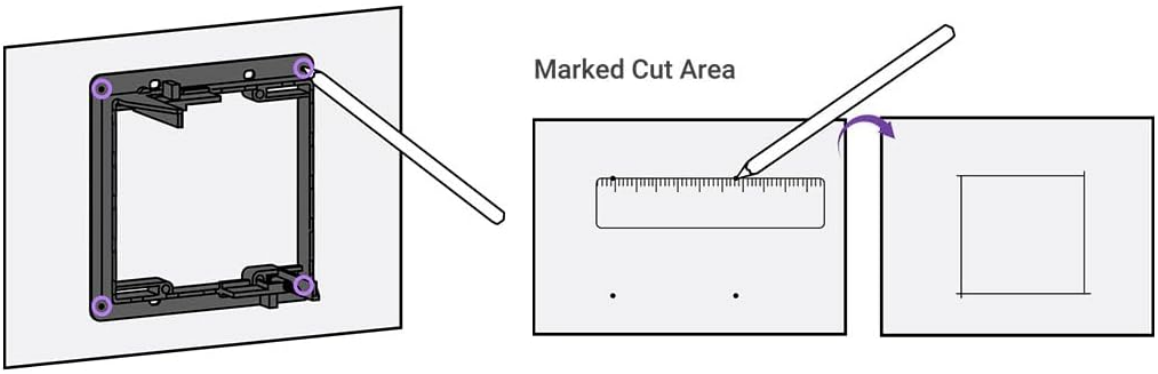

2. Cut Out the Marked Area

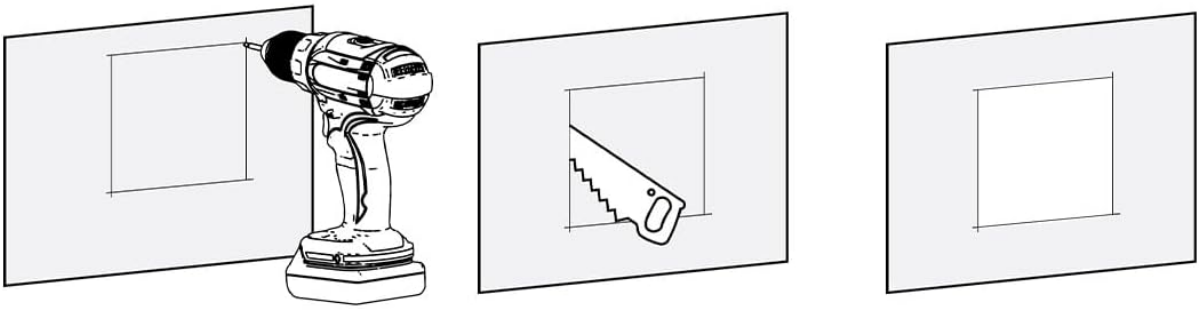

3. Install the Mounting Bracket

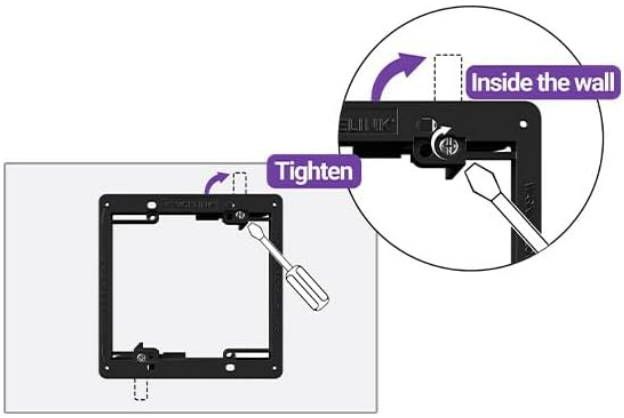

4. Attach the Brush Wall Plate

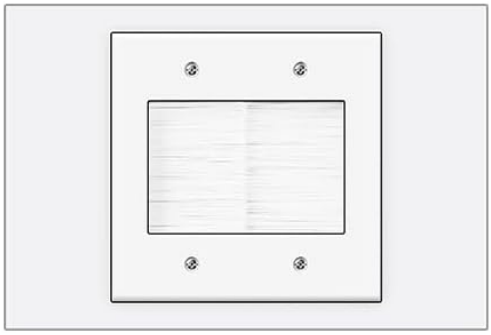

This diagram provides precise measurements for the brush wall plate and its mounting bracket, including the overall dimensions, the size of the cable opening, and recommended drywall thickness for installation.

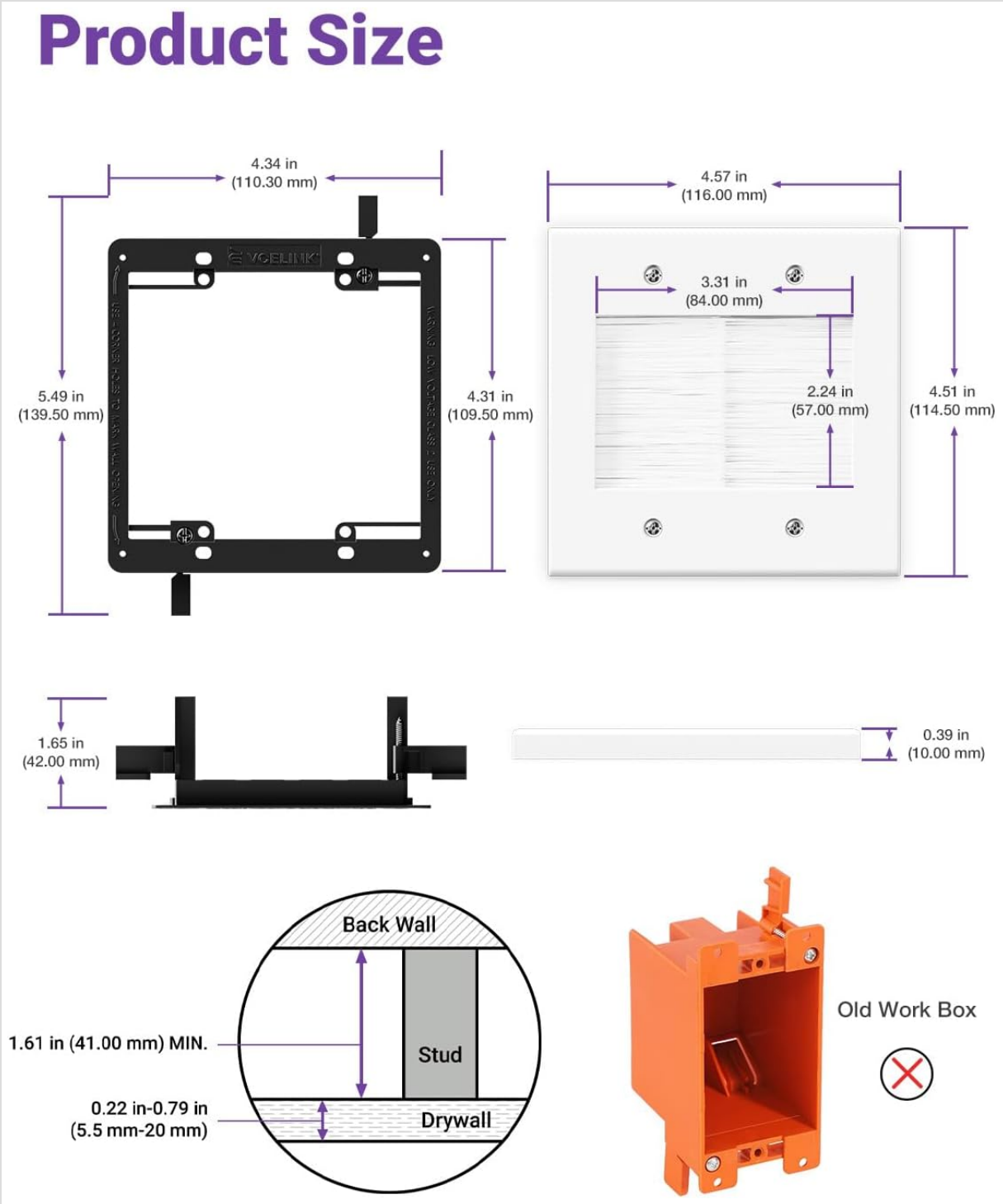

This image details the construction materials of the wall plate, highlighting the heavy-duty, fire-resistant PC material for the frame and the dustproof, waterproof, and non-deforming nylon bristles.

5. Setup and Installation

Follow these steps to properly install your VCELINK 2 Gang Brush Wall Plate:

Tools Required:

- Electric Drill
- Drywall Saw
- Phillips or Flathead Screwdriver
- Pencil or Marker
- Ruler or Straightedge

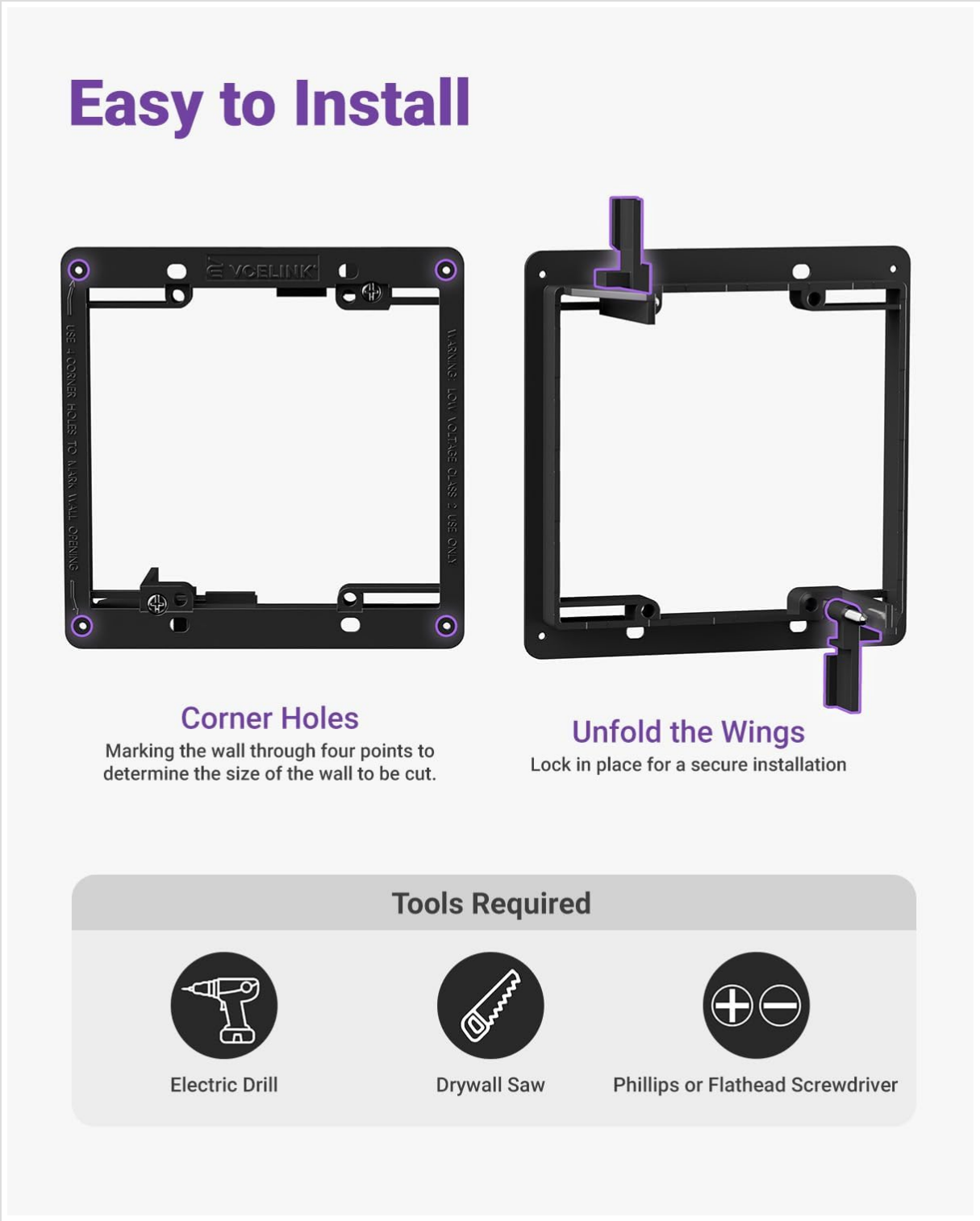

This diagram highlights the 'Easy to Install' features, detailing how to use the corner holes for marking the wall and how the bracket's wings lock in place for a secure fit. It also lists required tools: Electric Drill, Drywall Saw, Phillips or Flathead Screwdriver.

Installation Steps:

1. **Mark the Wall Opening:** Position the mounting bracket on the desired wall location. Use the four corner holes on the bracket to mark the wall with a pencil. Ensure the marked area is level and clear of obstructions.
2. **Cut the Opening:** Drill pilot holes at the marked corners. Using a drywall saw, carefully cut along the marked lines to create the rectangular opening in the wall. Ensure the cut is clean and precise for a snug fit.
3. **Install the Mounting Bracket:** Insert the mounting bracket into the cut opening. The bracket features adjustable wings. Tighten the screws on the bracket to extend the wings, securing the bracket firmly against the inside of the drywall.

4. **Attach the Brush Wall Plate:** Align the brush wall plate with the installed mounting bracket. Secure the faceplate to the bracket using the provided screws. Do not overtighten.

This series of illustrations provides a clear, step-by-step guide for installing the brush wall plate. It covers marking the wall opening, cutting the area, installing the mounting bracket, and finally attaching the brush wall plate.

Installation Video Guide:

Your browser does not support the video tag.

This video demonstrates the complete installation process for the VCELINK 2 Gang Brush Wall Plate, from marking the wall to securing the plate, providing a visual guide for users.

6. Operating Instructions

Once the brush wall plate is installed, you can begin routing your cables:

- Gently push the desired low-voltage cables (e.g., HDMI, Ethernet, coaxial, speaker wires) through the brush opening.
- The soft nylon bristles will flex to accommodate the cables, allowing them to pass through while maintaining a sealed opening.
- Arrange the cables as needed on both sides of the wall for a tidy setup.

This image illustrates the large capacity of the brush wall plate, showing several HDMI and USB-C cables neatly routed through the brush opening. Dimensions for the opening are also visible.

This image demonstrates the effectiveness of the 2 Gang Brush Wall Plate in managing cables. The 'before' shows messy cables behind a TV, while the 'after' shows a clean setup with cables routed through the wall plate.

7. Maintenance

The VCELINK 2 Gang Brush Wall Plate requires minimal maintenance:

- To clean the faceplate, wipe it with a soft, damp cloth. Avoid abrasive cleaners that may damage the polished finish.
- The nylon bristles are designed to be durable and resist deformation. If dust accumulates, gently brush it away.

8. Troubleshooting

- **Cables are difficult to pass through:** Ensure you are not attempting to pass too many cables at once. The brush is designed for a large capacity, but excessive force should not be needed. Check if any cable connectors are snagging on the bristles.
- **Wall plate does not sit flush:** Verify that the wall opening was cut accurately and that the mounting bracket's wings are fully extended and tightened against the drywall. Uneven drywall surfaces may require minor adjustments.
- **Dust or pests entering through the brush:** While the brush is designed to minimize this, ensure the bristles are not overly spread apart by too many cables. If the issue persists, consider reducing the number of cables or repositioning them for better brush coverage.

9. Warranty and Support

VCELINK stands behind the quality of its products. This product comes with an **18-month warranty** for any quality-related issues.

For technical support, warranty claims, or any questions regarding your VCELINK 2 Gang Brush Wall Plate, please refer to the contact information provided with your purchase or visit the official VCELINK website.

© 2025 VCELINK. All rights reserved.

Related Documents - A181+A182

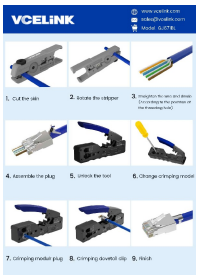	VCELINK GJ671BL RJ45 Crimping Tool Operation Guide Step-by-step instructions for using the VCELINK GJ671BL crimping tool to assemble RJ45 connectors for network cables, including CAT5 and CAT7.
	VCELINK 2025 Brand Product Brochure Explore the VCELINK 2025 Brand Product Brochure, featuring a comprehensive range of network accessories, hand tools, and brand services. Discover high-quality products designed for professionals and DIY enthusiasts alike, with a focus on innovation and customer satisfaction.
	VCELINK 2025 Brand Product Brochure: Networking Tools & Accessories Explore the comprehensive VCELINK 2025 Brand Product Brochure, featuring a wide range of high-quality networking tools, connectors, cables, wall plates, and audio/video accessories designed for professionals and DIY enthusiasts. Discover solutions for reliable connectivity and efficient installations.

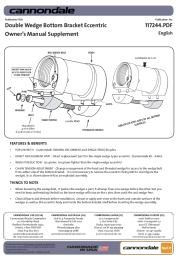 cannondale Product Line Double Wedge Bottom Bracket Eccentric Owner's Manual Supplement Model 117244, PDF English FEATURES & BENEFITS THINGS TO NOTE	[Cannondale Double Wedge Bottom Bracket Eccentric Owner's Manual Supplement - Installation & Adjustment Guide] Official owner's manual supplement for the Cannondale Double Wedge Bottom Bracket Eccentric. Learn installation, adjustment, and maintenance for your bicycle component. Includes torque specs and chain tension guide.
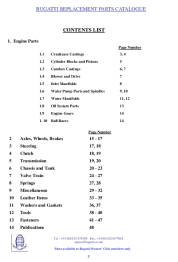 BUGATTI REPLACEMENT PARTS CATALOGUE CONTENTS LIST 1. Engine Parts Page Number 1.1 Crankcase Castings 3, 4 1.2 Cylinder Blocks and Pistons 5 1.3 Gearbox Castings 6, 7 1.4 Blower and Drive 7 1.5 Inlet Manifolds 8 1.6 Water Pump Parts and Spindles 9, 10 1.7 Water Manifolds 11, 12 1.8 Oil System Parts 13 1.9 Engine Stores 14 1.10 Ball Bases 14 Page Number 2 Axles, Wheels, Brakes 15 - 17 3 Steering 17, 18 4 Clutch 18, 19 5 Transmission 19, 20 6 Chassis and Tank 20 - 23 7 Valve Train 24 - 27 8 Springs 27, 28 9 Miscellaneous 29 - 32 10 Leather Items 33 - 35 11 Washers and Gaskets 36, 37 12 Tools 38 - 40 13 Fasteners 41 - 47 14 Publications 48 T.E. +44(0)1423 870400 Fax +44(0)1423 567904 sales@bugatti.co.uk Parts available to Bugatti Owners' Club members only 2	[Bugatti Replacement Parts Catalogue for Classic Models] This comprehensive catalogue lists replacement parts for various classic Bugatti models, including engine components, chassis parts, steering, brakes, and more. Essential for owners and restorers.