Saved from manuals.plus.
Open the live page for links to other documents and user manuals.

WAVLINK N300

WAVLINK N300 Wireless Outdoor Access Point User Manual

Model: N300 | Brand: WAVLINK

Product Overview

The WAVLINK N300 Wireless Outdoor Access Point is a versatile device designed to extend Wi-Fi coverage in outdoor environments. It offers robust performance with a focus on long-range transmission, high-speed connectivity, and durability in various weather conditions.

Key Features

- **Extended Outdoor Wi-Fi Coverage:** Delivers up to 300Mbps network speed and supports up to 64 devices, ideal for expanding Wi-Fi surveillance or general access in large outdoor areas like gardens, yards, garages, barns, warehouses, and communities.
- **Long-Range Transmission:** Capable of wireless data transmission up to 5000ft (1.5km) in obstacle-free point-to-point (PtP) or point-to-multipoint (PtMP) configurations.
- **Directional Antenna System:** Equipped with two embedded 11dBi directional MIMO antennas to strengthen Wi-Fi signals in a chosen direction, providing enhanced focused delivery and maximizing network efficacy.
- **Weatherproof Design:** Features an IP65-certified housing that is waterproof and heatproof, ensuring continuous operation in extreme temperatures from -22℉ to 158℉. Includes 15KV ESD and 4KV lightning protection for stable outdoor connections.
- **Power over Ethernet (PoE) Installation:** Utilizes 24V passive PoE, integrating power and network connectivity into a single cable, simplifying installation in outdoor areas without direct access to power outlets.



This image displays the main components of the WAVLINK N300 system, including the outdoor access point unit, the PoE (Power over Ethernet) injector, and the connected directional antennas, illustrating how power and data are supplied through a single Ethernet cable.

Package Contents

Verify that all items listed below are included in your package:

- 1x WAVLINK Wireless Outdoor Wi-Fi range extender
- 1x Directional antenna panel
- 1x Main body holder
- 1x PoE converter
- 1x RJ-45 network cable
- 1x Power adapter
- 1x Screw/Bracket fitting kit

- 2x Cable ties
- 1x Quick start guide



This photograph shows all the items you will find inside the product box, including the main access point unit, antenna, mounting hardware, PoE injector, power adapter, Ethernet cable, and documentation.

Installation Guide

Step 1: Physical Installation

The WAVLINK N300 offers flexible mounting options for outdoor deployment.

- **Wall Mounting:** Secure the device directly to a wall using the provided screw/bracket fitting kit.
- **Pole Mounting:** Attach the device to a pole using the included cable ties and U-bolts for a secure fit.



This image provides visual guidance for installing the access point, demonstrating how it can be securely attached to a wall or a pole, highlighting its adaptability for various outdoor setups.

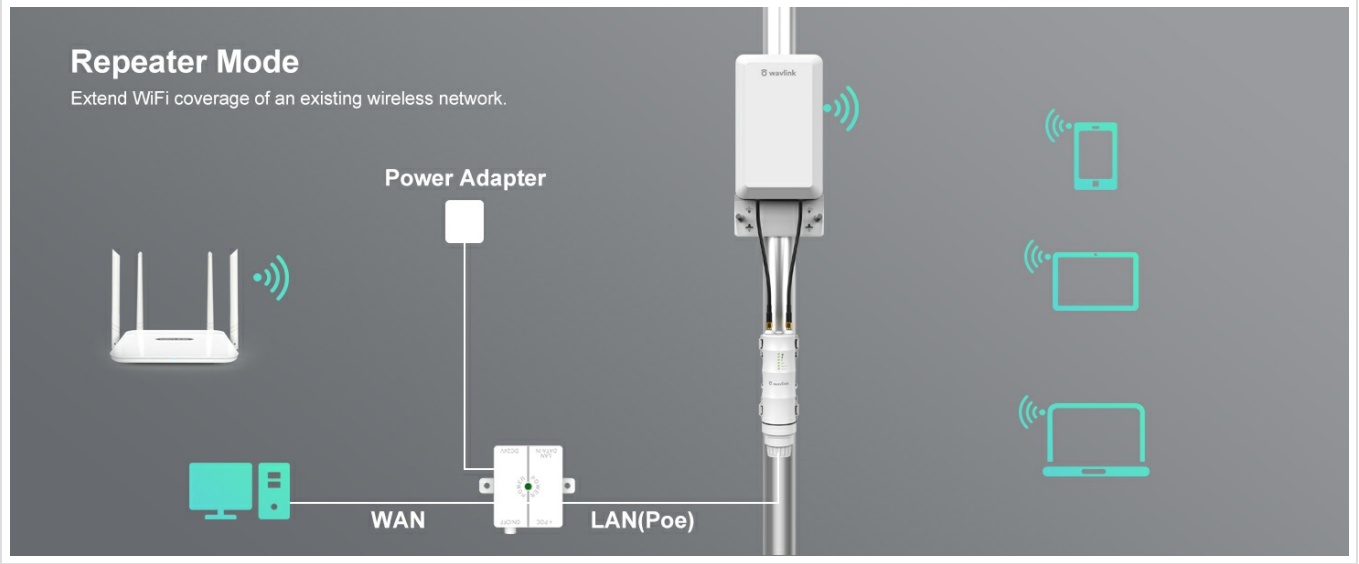

This detailed diagram illustrates the six steps required to mount the WAVLINK N300 onto a round pole, showing how to attach the bracket, secure the antenna, and connect the cables for a stable installation.

Step 2: Power and Network Connection (PoE)

The device is powered via Power over Ethernet (PoE), simplifying cabling.

1. Connect one end of the RJ-45 network cable to the LAN/PoE port on the WAVLINK N300.
2. Connect the other end of this cable to the "PoE" port on the provided PoE converter.
3. Connect your existing network (router or switch) to the "LAN" port on the PoE converter using another RJ-45 network cable.
4. Plug the power adapter into the PoE converter and then into a power outlet.
5. Observe the LED indicators on the device to confirm power and network connectivity.

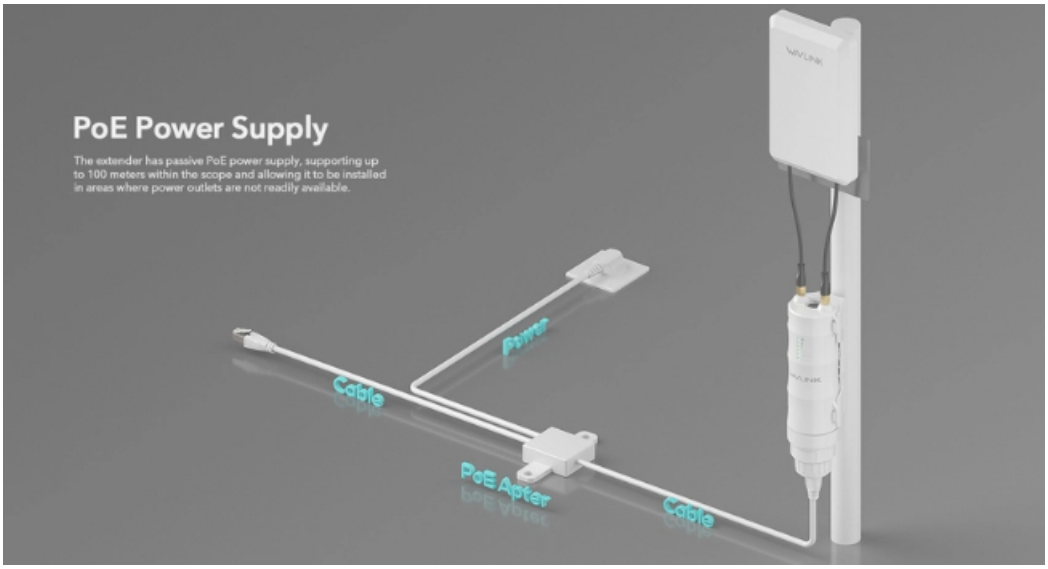

This diagram visually explains how the Power over Ethernet (PoE) system works, showing the connection flow from the power adapter to the PoE adapter, and then via a single Ethernet cable to the outdoor access point, providing both power and data.

Operating Modes

The WAVLINK N300 supports multiple operating modes to suit various network requirements.

Access Point (AP) Mode

In AP mode, the device converts a wired network connection into a wireless one, allowing Wi-Fi devices to connect.

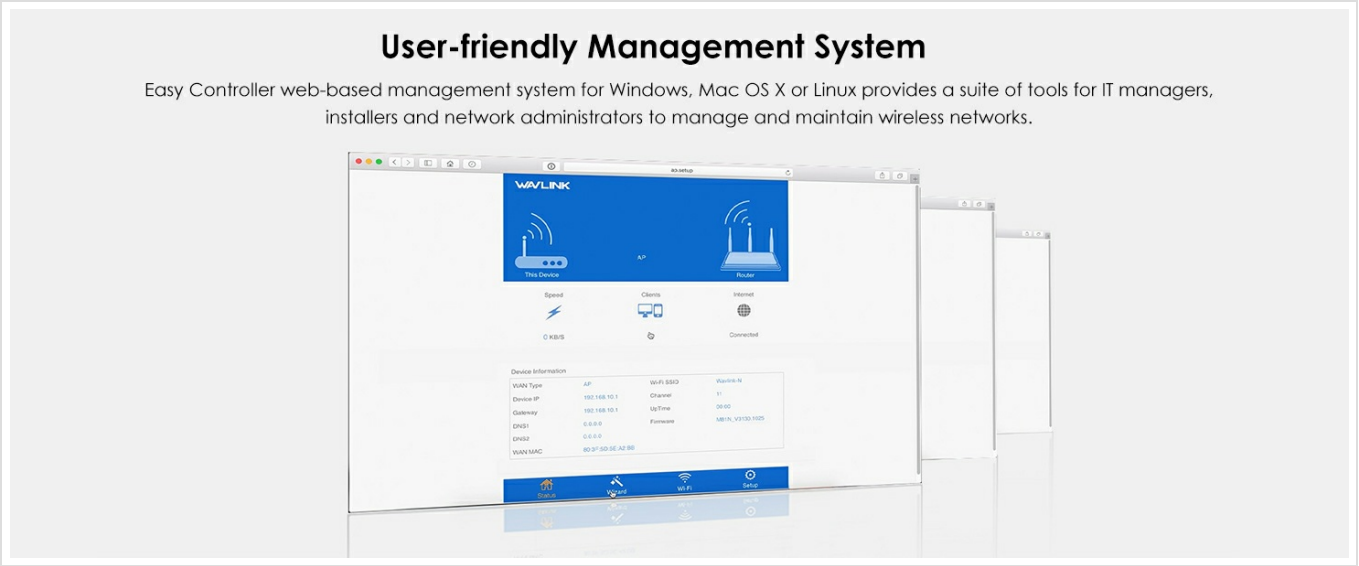

This diagram shows the WAVLINK N300 operating in AP mode, where it connects to an existing wired router and broadcasts a Wi-Fi signal for wireless devices like laptops, tablets, and phones.

Router Mode

In Router mode, the device acts as a primary network router, providing internet access to connected devices.

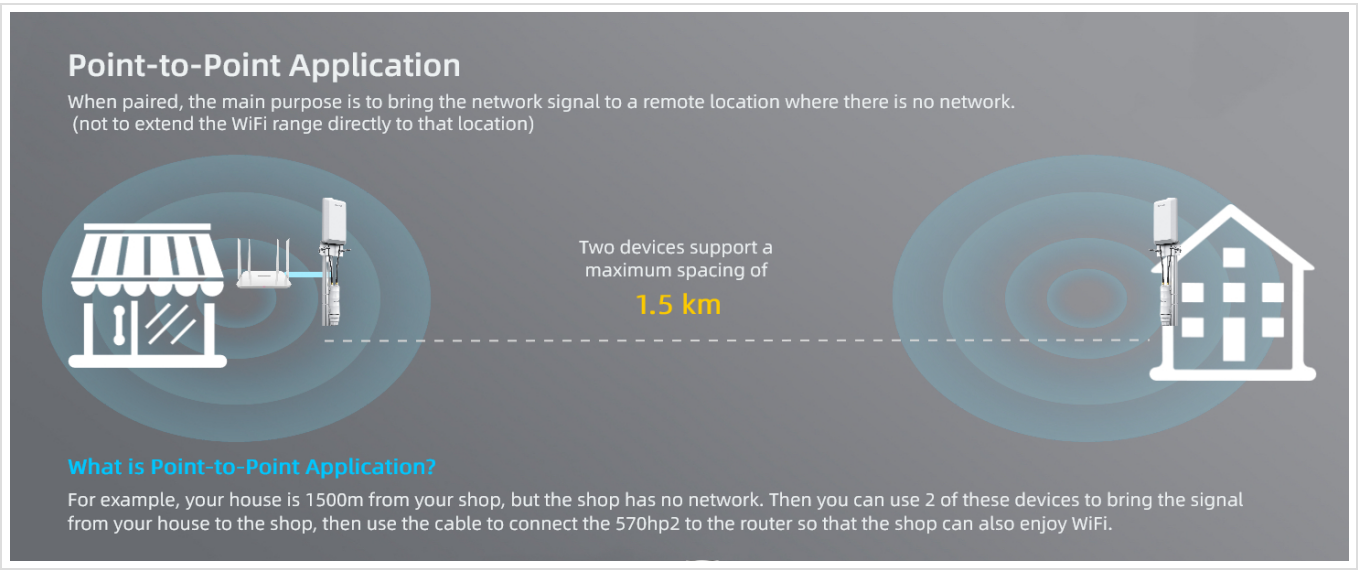

This diagram depicts the WAVLINK N300 functioning as a router, connecting directly to the internet source (WAN) and providing Wi-Fi connectivity to multiple client devices.

Repeater Mode

Repeater mode extends the coverage of an existing wireless network, eliminating Wi-Fi dead zones.

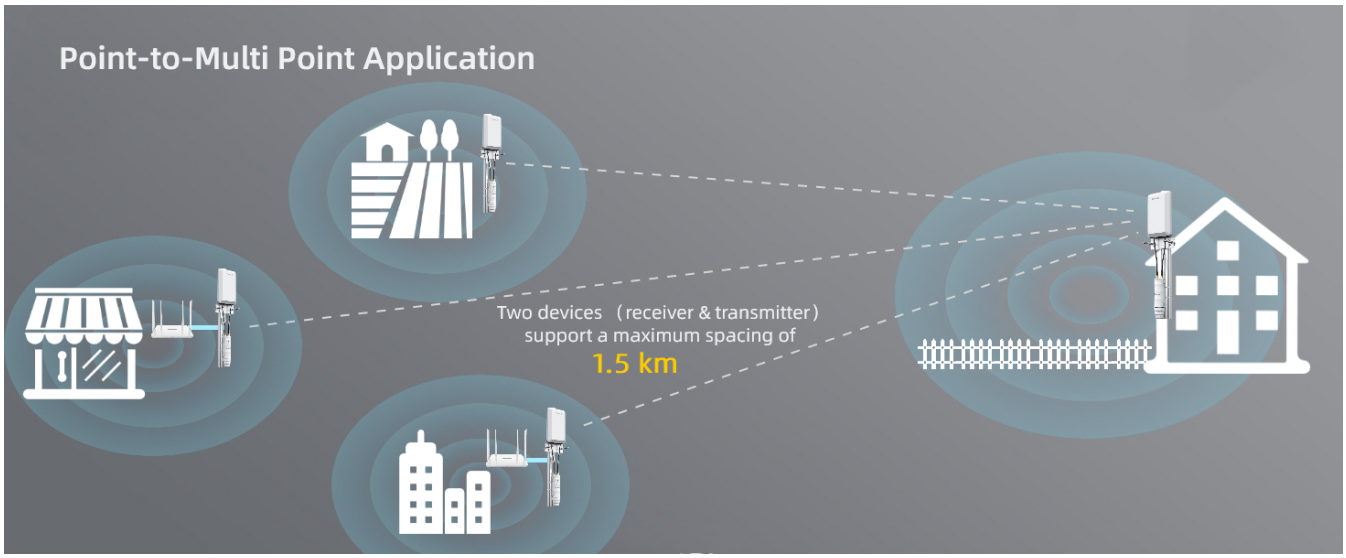

This diagram shows the WAVLINK N300 in Repeater mode, wirelessly connecting to an existing Wi-Fi router to extend its signal range and improve coverage for devices further away.

Point-to-Point (PtP) Application

When paired, two devices can bring a network signal to a remote location where there is no existing network, rather than directly extending Wi-Fi range. Supports a maximum spacing of 1.5 km (5000 ft).

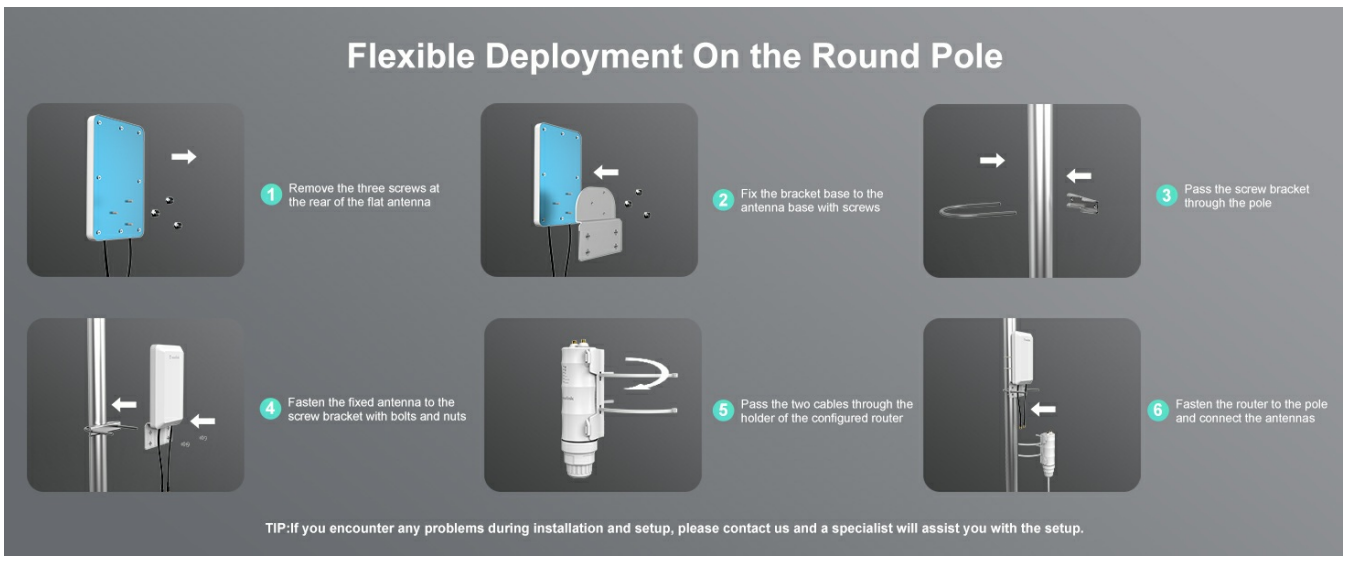

This diagram demonstrates how two WAVLINK N300 units can be used to establish a long-distance wireless bridge, connecting a network from one location (e.g., a house) to another remote location (e.g., a shop) up to 1.5 km away.

Point-to-Multi Point (PtMP) Application

Similar to PtP, but one central device can transmit to multiple remote devices, creating a network across several distant points. Supports a maximum spacing of 1.5 km (5000 ft) between transmitter and receivers.

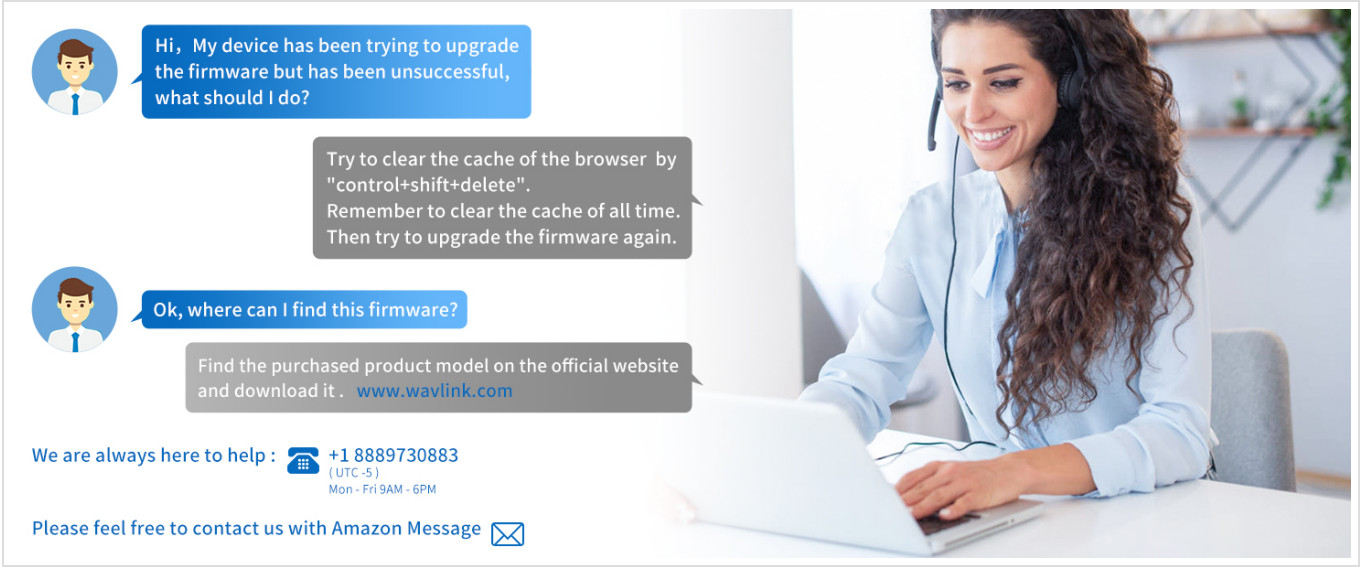

This diagram shows a Point-to-Multi Point setup where one WAVLINK N300 unit acts as a central transmitter, broadcasting a network signal to multiple remote WAVLINK N300 receiver units in different locations, such as a shop, a farm, and a city building.

Technical Specifications

Feature	Detail
Package Dimensions	12.01 x 5.59 x 3.7 inches
Item Weight	2.14 pounds
ASIN	B0D9D4CPP4
Date First Available	September 1, 2024
Manufacturer	WAVLINK
Country of Origin	China
Brand	WAVLINK
Wireless Communication Standard	802.11bgn
Data Transfer Rate	300 Megabits Per Second
Frequency Band Class	Single-Band (2.4GHz)
Special Feature	QoS, Weatherproof, Detachable Antenna, Access Point Mode, Power Over Internet (PoE)
Antenna Type	2 x 11dBi Directional MIMO Antennas
Max Wireless Transmission Range	5000ft (1.5km)
Operating Temperature Range	-22℉ to 158℉
Protection	IP65-certified, 15KV ESD, 4KV Lightning Protection

Troubleshooting Common Issues

No Power/LED Indicators Off

- Ensure the power adapter is securely connected to the PoE converter and a working electrical outlet.
- Verify the Ethernet cable from the PoE converter's "PoE" port is correctly connected to the WAVLINK N300.

No Internet Connection

- Check the Ethernet cable connection from your main router/switch to the "LAN" port on the PoE converter.
- Confirm your main router has an active internet connection.
- If in AP/Repeater mode, ensure the WAVLINK N300 is correctly configured to connect to your existing Wi-Fi network.

Poor Signal Strength or Range

- Ensure the WAVLINK N300 is mounted in an optimal location with minimal obstructions between it and the desired coverage area.
- Verify the directional antennas are pointed towards the intended reception area.
- Reduce interference from other electronic devices or Wi-Fi networks.

Firmware Upgrade Issues

- Clear your browser's cache and cookies (Ctrl+Shift+Delete or equivalent).
- Download the correct firmware for your model from the official WAVLINK website (www.wavlink.com).
- Attempt the firmware upgrade again.

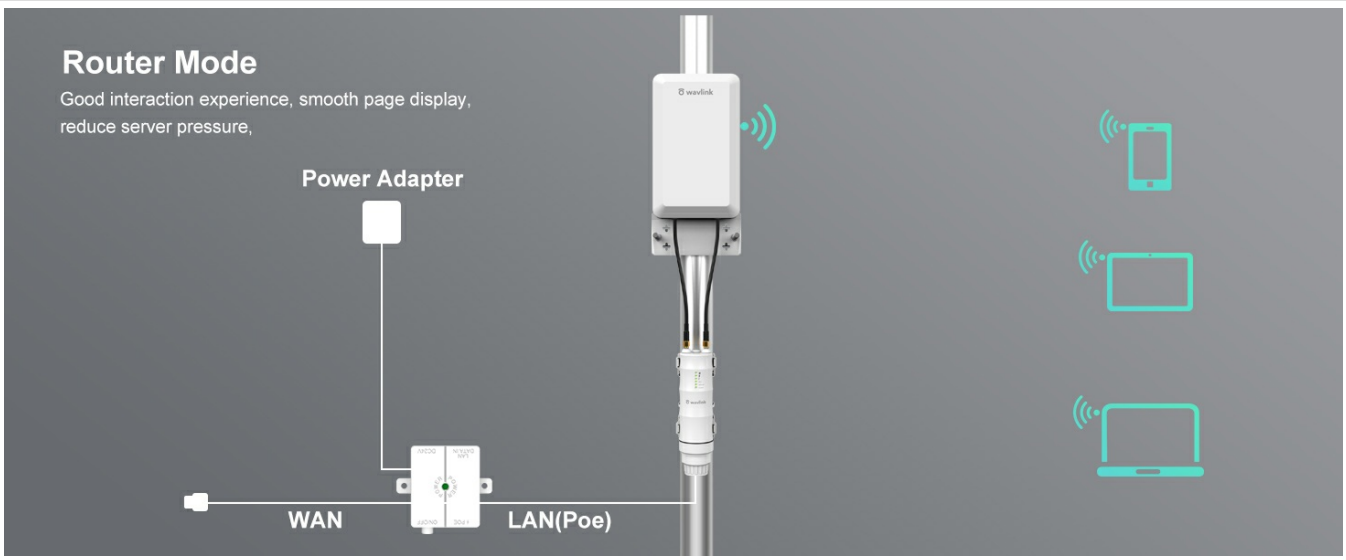

This image shows a simulated customer support chat, providing examples of common questions and solutions, such as troubleshooting firmware upgrades, and directing users to the official WAVLINK website for resources.

Maintenance and Care

- **Cleaning:** Periodically wipe the exterior of the device with a soft, dry cloth to remove dust and debris. Do not use liquid cleaners or aerosols.
- **Cable Inspection:** Regularly inspect all connected cables for any signs of wear, damage, or corrosion, especially in outdoor environments.
- **Firmware Updates:** Check the official WAVLINK website (www.wavlink.com) periodically for new firmware updates

to ensure optimal performance and security.

- **Environmental Considerations:** While designed for outdoor use, avoid placing the device in locations prone to extreme physical impact or prolonged submersion in water.

Warranty and Customer Support

For technical assistance, warranty information, or further inquiries, please contact WAVLINK customer support.

- **Phone Support:** +1 8889730883 (UTC-5, Mon - Fri 9AM - 6PM)
- **Online Support:** Contact via Amazon Message or visit the official WAVLINK website:www.wavlink.com

Please retain your purchase receipt for warranty claims.

© 2025 WAVLINK. All rights reserved.

Ask a question about this manual

Ask about setup, troubleshooting, compatibility, parts, safety, or missing instructions. Manuals+ will review the question and use this page's manual context to help answer it.

Name

Anonymous

Email

you@example.com

After a successful submission, we securely hash the supplied account or form email before sending it to Microsoft Advertising for conversion attribution. Privacy details.

Question

Example: How do I reset this device or fix this error?

Details

Model number, symptoms, what you tried, or the section of the manual you are using.

Submit question

Open the live page

https://manuals.plus/asin/B0D9D4CPP4

More documents and user manuals: **https://manuals.plus/**