Saved from manuals.plus.
Open the live page for links to other documents and user manuals.

Innovative Marine 0517-P

Innovative Marine 25 Gallon Lagoon Aquarium Starter Kit User Manual

Model: 0517-P

1. Introduction

Thank you for choosing the Innovative Marine 25 Gallon Lagoon Aquarium Starter Kit. This manual provides essential information for the proper setup, operation, and maintenance of your new aquarium. Please read these instructions carefully before beginning to ensure a successful and enjoyable aquatic experience.



Image: The Innovative Marine 25 Gallon Lagoon Aquarium, showcasing its sleek design and clear glass.

2. Safety Information

Always prioritize safety when handling and operating your aquarium. Failure to follow these guidelines may result in injury or damage to the product.

- **Electrical Safety:** Ensure all electrical components are properly grounded. Do not operate with wet hands. Disconnect power before performing any maintenance.
- **Water and Weight:** An aquarium filled with water is very heavy. Ensure the stand or surface it rests on is sturdy and level enough to support the full weight.
- **Placement:** Place the aquarium on a flat, level surface away from direct sunlight, heat sources, and areas with high foot traffic.
- **Children and Pets:** Keep out of reach of small children and pets to prevent accidental damage or injury.
- **Glass Handling:** Handle the aquarium glass with care to avoid chips or cracks.

3. Package Contents

Verify that all components are present and undamaged upon unpacking.

- 25 Gallon Lagoon Aquarium (Low Iron Glass, 8mm thickness)
- Pre-Installed Rubber Leveling Mat
- Built-in Acrylic Overflow Wall
- Integrated Emergency Overflow
- (2) Removable 200 Micron Filter Socks
- (2) Adjustable 130 GPH DC Return Pumps (5W/24V)
- Flexible Hoses
- Return Elbows
- Directional Flow Nozzles

4. Setup Instructions

Follow these steps to set up your Innovative Marine 25 Gallon Lagoon Aquarium.

4.1. Placement

- Choose a sturdy, level surface capable of supporting approximately 250 lbs (aquarium weight + water + substrate + decor).
- Ensure the location is away from direct sunlight to prevent excessive algae growth and temperature fluctuations.
- Allow sufficient space around the aquarium for maintenance and access to equipment.

4.2. Leveling Mat Installation

The aquarium comes with a pre-installed rubber leveling mat. This mat protects your furniture and the aquarium glass by distributing weight evenly and absorbing minor imperfections in the surface.



Image: Close-up view of the self-leveling aquarium mat, designed to protect surfaces and the tank.

4.3. Aquarium Dimensions

Understanding the dimensions is crucial for planning your aquascape and equipment placement.



Image: Diagram showing the external dimensions of the aquarium: Length 23.6", Width 19.7", Height 11.8".

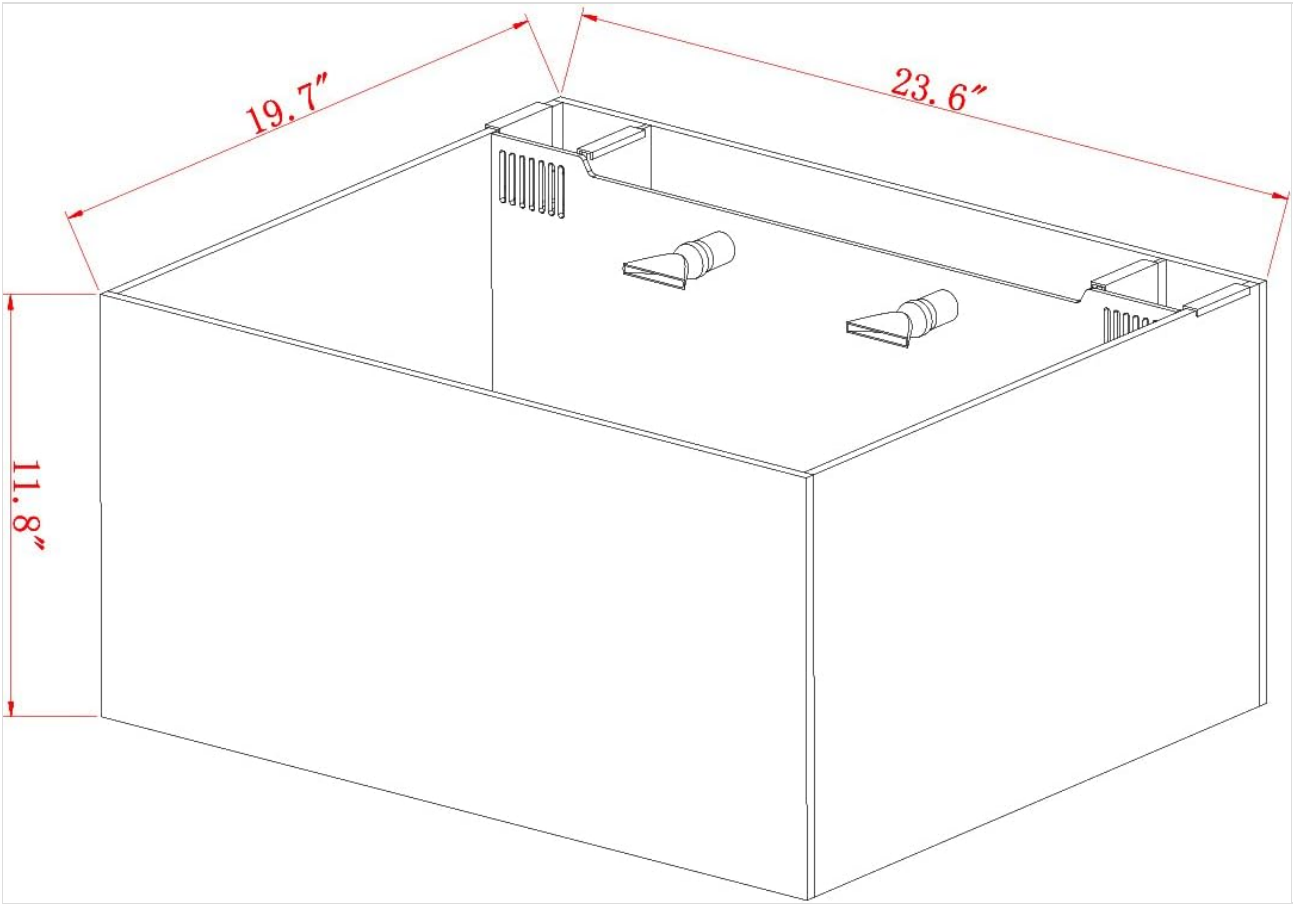

Image: Diagram illustrating the internal dimensions and filtration chamber layout, including overflow and baffle heights.

4.4. Filtration System Setup

The aquarium features a built-in acrylic overflow wall and integrated emergency overflow for efficient filtration.

1. **Filter Socks:** Insert the two 200 micron filter socks into their designated compartments within the overflow wall. These socks are crucial for mechanical filtration.

2. **Return Pumps:** Place the two adjustable 130 GPH DC return pumps into the return pump chambers. Connect the flexible hoses to the pump outlets and route them over the overflow wall to the return elbows and directional flow nozzles in the main display area. Adjust the nozzles to direct water flow as desired.



Image: The adjustable 130 GPH DC return pump (5W/24V) and its power adapter.

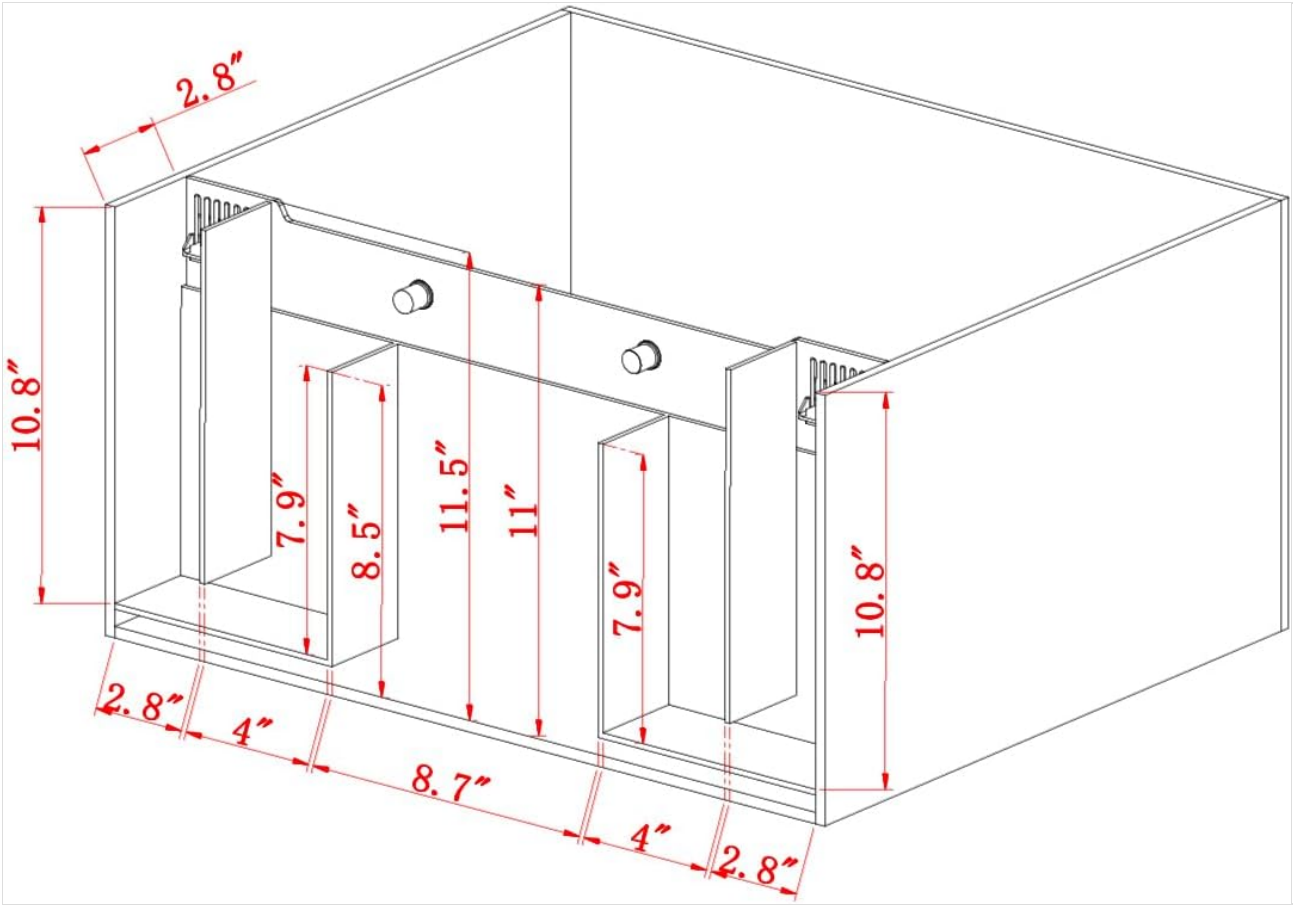

Image: A 200 micron filter sock, designed to improve water quality by trapping small impurities and uneaten food.



Image: Detail of the built-in emergency overflow, which bypasses the main overflow in case of blockage.

5. Operating Instructions

Once the aquarium is set up, follow these steps to begin operation.

5.1. Filling the Aquarium

- Before adding water, ensure all equipment is securely in place and all connections are tight.
- Carefully add dechlorinated fresh water or prepared saltwater to the main display area. Fill slowly to avoid disturbing any substrate or decor.
- Fill until the water level reaches the desired height, typically just below the top edge of the overflow wall.

5.2. Starting the Filtration System

- Once the aquarium is filled, plug in the power adapters for the DC return pumps.
- The pumps will begin circulating water through the filtration chambers and back into the display.
- Check for any leaks immediately after starting the pumps.

5.3. Water Parameters and Cycling

For a healthy aquatic environment, it is essential to maintain stable water parameters. If this is a new setup, you will need to cycle the aquarium before adding livestock. Consult a reliable guide on aquarium cycling for detailed instructions.

6. Maintenance

Regular maintenance is vital for the longevity of your aquarium and the health of its inhabitants.

6.1. Filter Sock Replacement

- The 200 micron filter socks should be rinsed or replaced regularly, typically every 3-7 days, depending on the bioload.
- To replace, simply lift the old sock out of its compartment and insert a clean one.

6.2. Water Changes

- Perform partial water changes (10-20% of total volume) weekly or bi-weekly to remove accumulated nitrates and replenish essential elements.
- Always use dechlorinated fresh water or properly mixed saltwater that matches the aquarium's temperature and salinity.

6.3. Cleaning the Aquarium

- Clean the interior glass surfaces as needed to remove algae using an aquarium-safe scraper or magnet cleaner.
- Periodically clean the filtration chambers and return pumps to prevent debris buildup and ensure optimal flow.

6.4. Emergency Overflow Check

- Regularly inspect the emergency overflow to ensure it is clear of obstructions. This system is designed to prevent flooding in case the main overflow becomes blocked.

7. Troubleshooting

This section addresses common issues you might encounter.

Problem	Possible Cause	Solution
Return pump not operating	Power outage; pump unplugged; impeller jammed; pump failure	Check power connection; clean impeller; replace pump if faulty.
Low water flow from return nozzles	Pump clogged; return lines obstructed; low water level in return chamber	Clean pump and lines; top off water in return chamber.
Cloudy water	New tank syndrome; overfeeding; insufficient filtration; dirty filter socks	Perform water changes; reduce feeding; replace filter socks; ensure proper cycling.

Problem	Possible Cause	Solution
Excessive algae growth	Too much light; high nutrients (nitrates/phosphates); overfeeding	Reduce lighting duration; perform water changes; reduce feeding; add algae-eating inhabitants.

8. Specifications

Detailed specifications for the Innovative Marine 25 Gallon Lagoon Aquarium Starter Kit.

- **Aquarium Volume:** Approximately 25 Gallons
- **Outside Dimensions (L x W x H):** 23.6" x 19.7" x 11.8"
- **Display Dimensions (L x W x H):** 23.6" x 16.9" x 11.8"
- **Tank Package Weight:** 62 lbs
- **Glass Thickness:** 8mm
- **Material:** Low Iron Glass, Black Silicone
- **Model Number:** 0517-P
- **Filtration:** Built-in Acrylic Overflow Wall, Integrated Emergency Overflow, (2) 200 Micron Filter Socks, (2) Adjustable 130 GPH DC Return Pumps (5W/24V)
- **Included Components:** Filter, Leveling Mat
- **Shape:** Rectangular
- **Specific Uses:** Indoor Aquarium

9. Warranty Information

The Innovative Marine 25 Gallon Lagoon Aquarium Starter Kit comes with a**1 Year Warranty** from the date of purchase. This warranty covers manufacturing defects under normal use. Please retain your proof of purchase for warranty claims. For specific terms and conditions, refer to the official Innovative Marine warranty policy or contact customer support.

10. Customer Support

For further assistance, technical support, or warranty inquiries, please contact Innovative Marine directly.

- **Manufacturer:** Innovative Marine
- **Online Store:** Visit the Innovative Marine Store on Amazon for additional products and information.

Ask a question about this manual

Ask about setup, troubleshooting, compatibility, parts, safety, or missing instructions. Manuals+ will review the question and use this page's manual context to help answer it.

Name

Anonymous

Email

you@example.com

After a successful submission, we securely hash the supplied account or form email before sending it to Microsoft Advertising for conversion attribution. Privacy details.

Question

Example: How do I reset this device or fix this error?

Details

Model number, symptoms, what you tried, or the section of the manual you are using.

Submit question

Open the live page

https://manuals.plus/asin/B0D956WMNK

More documents and user manuals: **https://manuals.plus/**