Saved from manuals.plus.
Open the live page for links to other documents and user manuals.

GAEWBBH vhugbu

Instruction Manual: Cartridge Vacuum Cleaner Filter

Brand: GAEWBBH | Model: vhugbu

Product Overview

This instruction manual provides essential information for the GAEWBBH Cartridge Vacuum Cleaner Filter. This filter is designed as a replacement part for Parkside PWD series PWD 25 A2 Aspirapolvere/liquidi Parkside 25L Wet/Dry vacuums.

The filter features a yellow pleated paper element and black foaming components, ensuring effective filtration for both wet and dry vacuuming tasks.



Image: The GAEWBBH Cartridge Vacuum Cleaner Filter, featuring a yellow pleated filter element and a black top and bottom.

Compatibility and Dimensions

This filter is specifically compatible with the following vacuum cleaner models:

- Parkside PWD series PWD 25 A2 Aspirapolvere/liquidi

- Parkside 25L Wet/Dry vacuums

Verify the dimensions of your existing filter to ensure proper fit. The approximate dimensions of this filter are:

- **Outer Diameter (OD):** 140mm (5.51 inches)
- **Inner Diameter (ID):** 102mm (4.02 inches)
- **Height (H):** 165mm (6.50 inches)

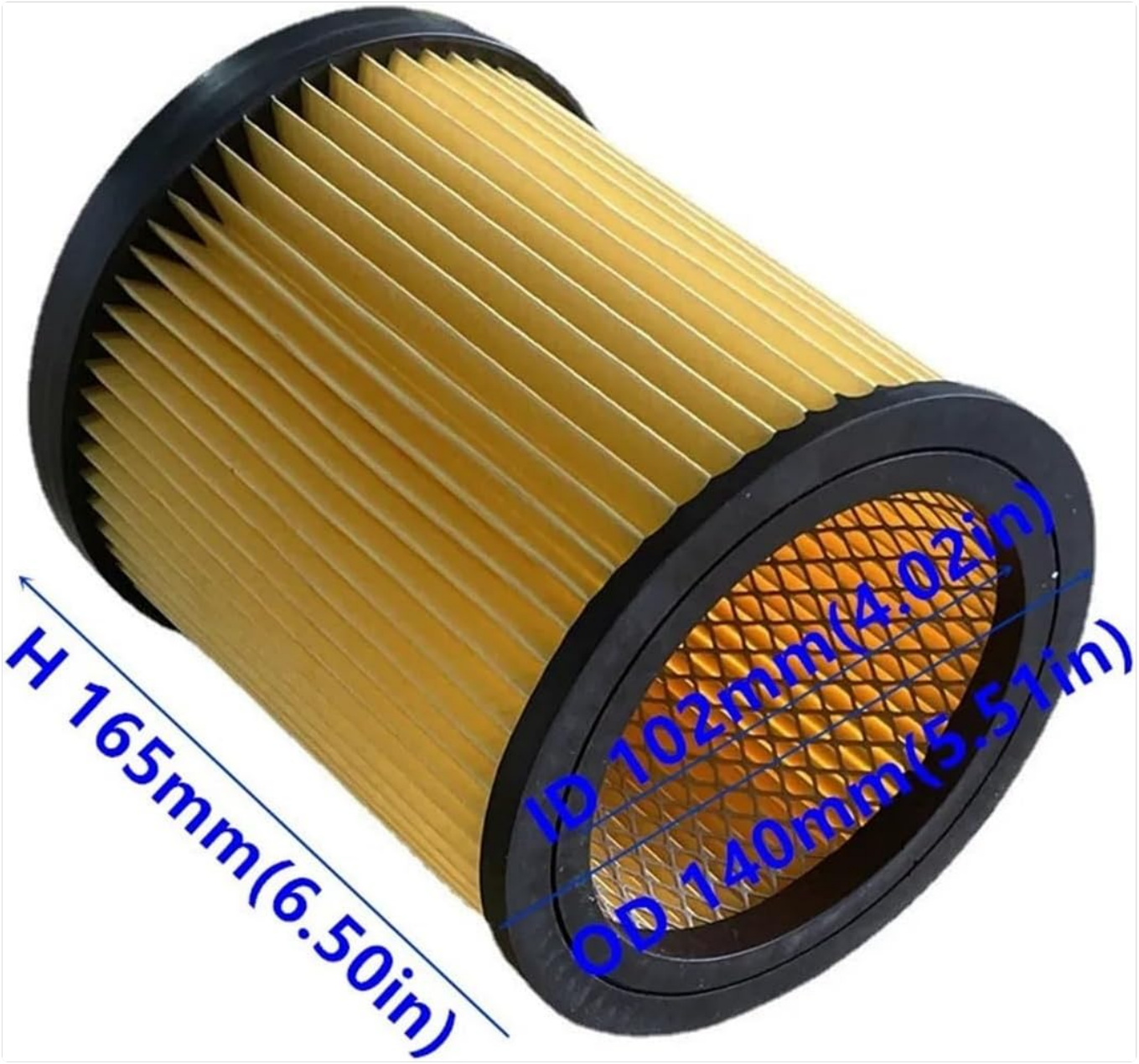

Image: A diagram illustrating the filter's dimensions: Outer Diameter (OD) 140mm, Inner Diameter (ID) 102mm, and Height (H) 165mm.



Image: A composite image showing the filter, its dimensions (OD140* ID102* H165mm), and an arrow pointing from the filter to a Parkside PWD 25 A2 Wet/Dry vacuum cleaner, indicating compatibility.

Installation Guide

Follow these steps to properly install or replace the cartridge filter in your Parkside PWD series wet/dry vacuum cleaner:

1. **Preparation:** Ensure the vacuum cleaner is unplugged from the power source before beginning any maintenance or installation. Open the vacuum cleaner to access the filter compartment.
2. **Remove Old Filter:** If replacing an old filter, carefully remove it. Depending on your model, this may involve twisting or pulling the filter off its mounting post.
3. **Position New Filter:** Align the new cartridge filter with the mounting post inside the vacuum cleaner.
4. **Secure Filter:** Gently push the filter down onto the post until it is firmly seated. Some models may require a slight twist to lock it into place. Ensure the filter is securely attached to prevent air leaks.
5. **Close Vacuum:** Close the vacuum cleaner housing and secure any latches.

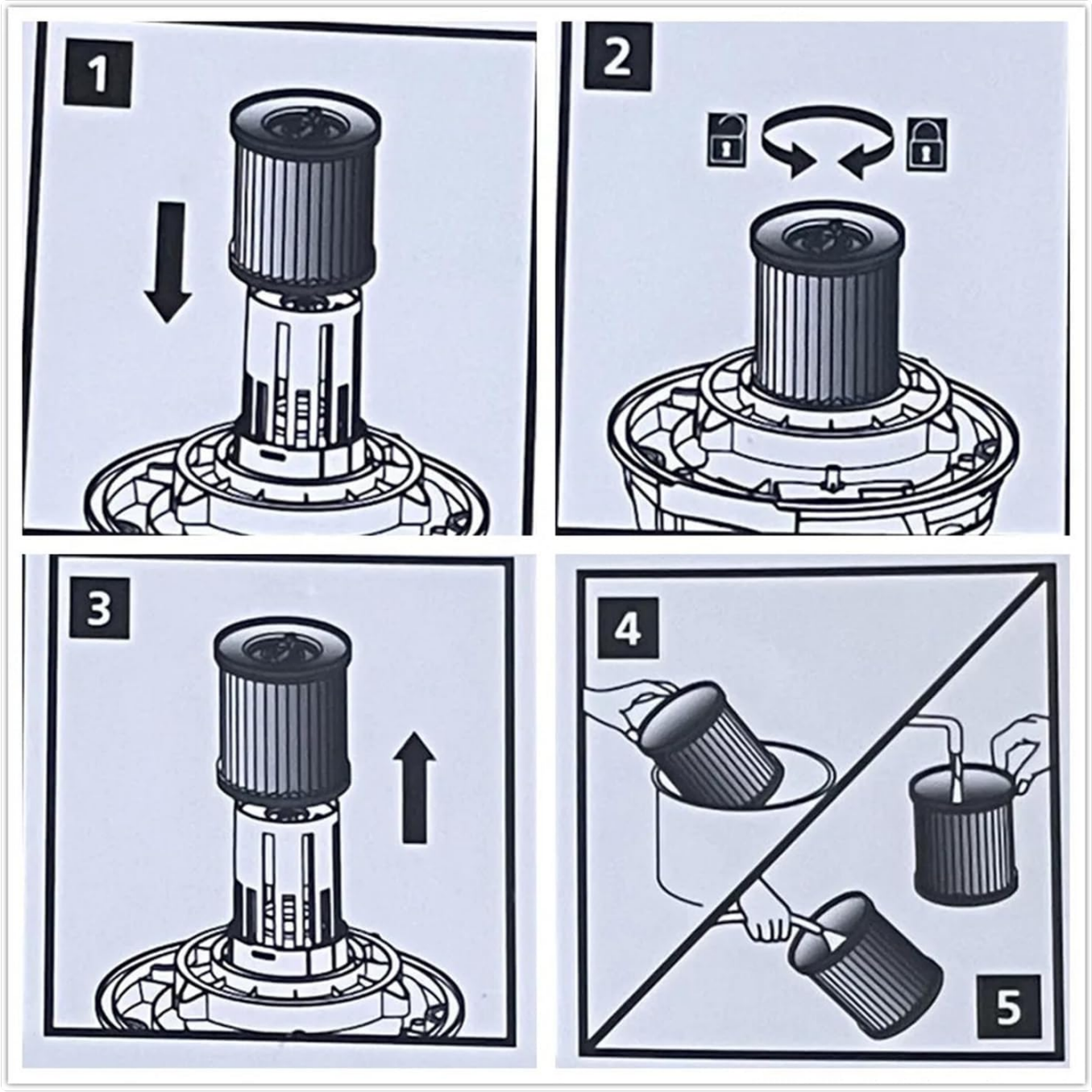

Image: A four-panel image illustrating filter handling. Panels 1-3 show the filter being inserted, twisted, and seated on a vacuum cleaner's central post. Panel 4 shows a method for cleaning the filter by tapping it.



Image: A multi-panel image demonstrating the filter installation process within a wet/dry vacuum cleaner, including views of the vacuum, the filter, and the filter being placed inside.

Maintenance

Regular maintenance of your vacuum filter is crucial for optimal performance and longevity of your vacuum cleaner.

- **Regular Cleaning:** For dry vacuuming, the filter can often be cleaned by gently tapping it to dislodge dust and debris. For wet vacuuming, allow the filter to dry completely before cleaning or storing.
- **Inspection:** Periodically inspect the filter for any signs of damage, tears, or excessive wear. A damaged filter can compromise suction and allow dust to enter the motor.
- **Replacement:** Replace the filter when it becomes heavily soiled, damaged, or if you notice a significant decrease in vacuum suction power, even after cleaning. The frequency of replacement depends on usage and the type of debris collected.

Troubleshooting

If you encounter issues related to the filter, consider the following:

- **Reduced Suction:**
  - Check if the filter is clogged with dust or debris. Clean or replace as necessary.
  - Ensure the filter is correctly installed and securely seated, preventing air leaks.
- **Unusual Noise:**
  - Verify the filter is properly installed and not loose, which could cause vibrations.
- **Dust Escaping:**
  - Inspect the filter for tears or damage. A compromised filter will not effectively contain dust. Replace immediately if damaged.
  - Ensure the filter is the correct size and type for your vacuum model.

Specifications

Attribute	Detail
Product Type	Cartridge Vacuum Cleaner Filter
Brand	GAEWBBH
Model Number	vhugbu
Compatibility	Parkside PWD series PWD 25 A2 Aspirapolvere/liquidi, Parkside 25L Wet/Dry vacuums
Material	Yellow pleated paper and black foaming
Color	Yellow
Outer Diameter (OD)	140mm (5.51 inches)
Inner Diameter (ID)	102mm (4.02 inches)
Height (H)	165mm (6.50 inches)
Item Weight	1.76 ounces
Package Dimensions	1.18 x 0.79 x 0.39 inches
Country of Origin	China

Warranty and Support

For information regarding returns or replacements, please refer to the retailer's return policy at the point of purchase. Typically, a 30-day return/replacement policy is offered.

For further assistance or inquiries about the GAEWBBH Cartridge Vacuum Cleaner Filter, please contact the seller or manufacturer through the platform where the product was purchased.

Note: Always ensure to purchase genuine replacement parts to maintain the performance and warranty of your vacuum cleaner.

© 2024 GAEWBBH. All rights reserved.

Ask a question about this manual

Ask about setup, troubleshooting, compatibility, parts, safety, or missing instructions. Manuals+ will review the question and use this page's manual context to help answer it.

Name

Anonymous

Email

you@example.com

After a successful submission, we securely hash the supplied account or form email before sending it to Microsoft Advertising for conversion attribution. Privacy details.

Question

Example: How do I reset this device or fix this error?

Details

Model number, symptoms, what you tried, or the section of the manual you are using.

Submit question

Open the live page

https://manuals.plus/asin/B0D6ZBBKKR

More documents and user manuals: **https://manuals.plus/**