Manuals+
Q & A | Deep Search | Upload

HUION ST500

HUION ST500 Freestanding Single Monitor Arm Instruction Manual

Model: ST500

Contents | Setup | Operation | Introduction | Maintenance | Safety Information | Troubleshooting & Support | Package | Specifications | Compatibility | Warranty

1. Introduction

Thank you for choosing the HUION ST500 Freestanding Single Monitor Arm. This product is designed to provide a flexible and ergonomic solution for mounting your monitor or pen display, enhancing your workspace comfort and productivity. It features a gas spring mechanism for smooth adjustments and a sturdy freestanding base for stability. Please read this manual carefully before installation and use to ensure proper operation and safety.

Figure 1: Overview of the HUION ST500 Freestanding Single Monitor Arm.

2. Safety Information

- Ensure the monitor arm is placed on a stable, level surface.
- Do not exceed the maximum weight capacity of 22 lbs (10 kg).
- Always ensure all screws are securely tightened before use.
- Keep children and pets away from the product during assembly and adjustment.
- Exercise caution when adjusting the arm, especially with a monitor attached, to prevent injury or damage.
- Do not attempt to disassemble or modify the gas spring mechanism.

3. Package Contents

Verify that all components are present before beginning assembly:

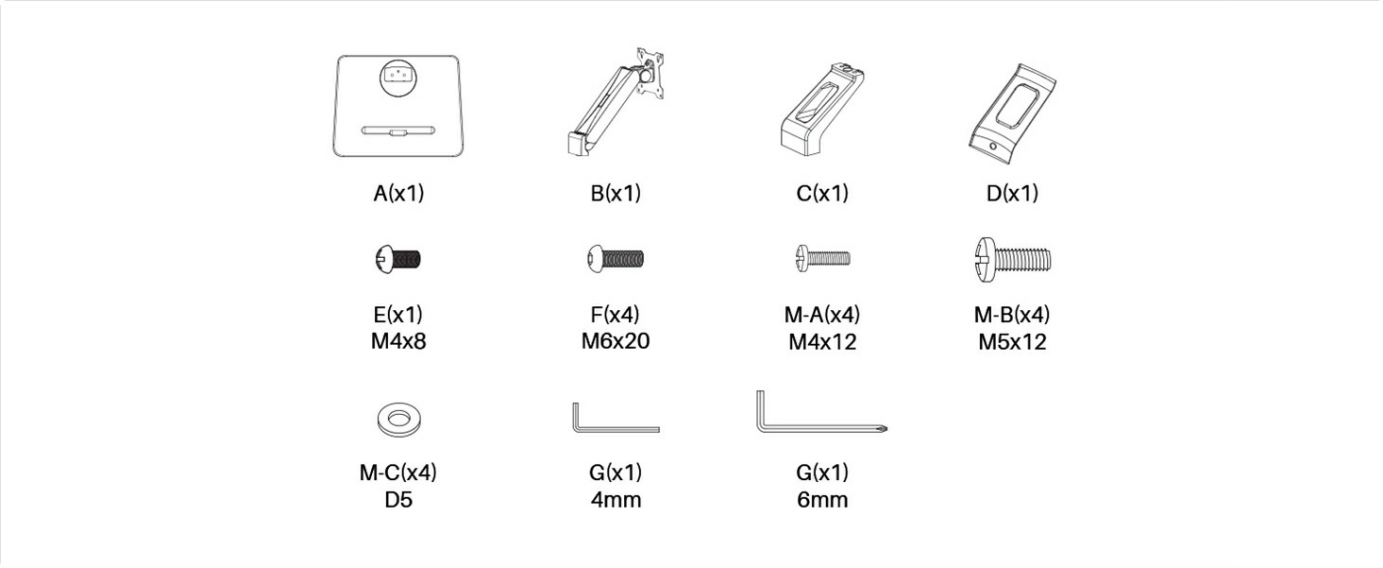

Figure 2: Included components and hardware.

- Desktop Arm ST500 (x1)
- Screwdriver (x1)
- Screw Pack (x1) - Includes various screws (M4x8, M6x20, M4x12, M5x12) and washers (D5)
- Hex Keys (4mm, 6mm) (x2)
- Quick Start Guide (x1)

4. Setup Instructions

Follow these steps to assemble your HUION ST500 monitor arm:

Step 1: Assemble the Base

Attach the arm support to the freestanding base using the provided screws and hex key.

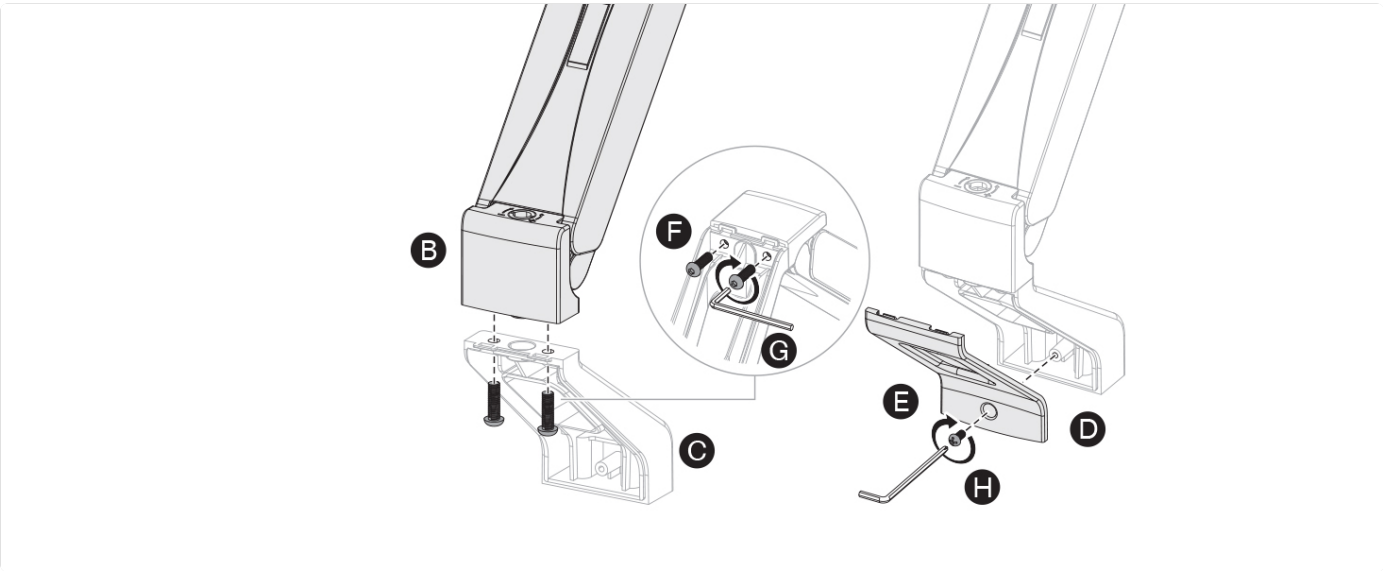

Figure 3: Secure the arm support to the base (A) using screws (F) and hex key (G).

Step 2: Attach the Arm to the Support

Connect the main arm (B) to the arm support (C) and secure it with the designated screws (F) and hex key (G). Ensure the cable management cover (D) and screw (E) are properly aligned.

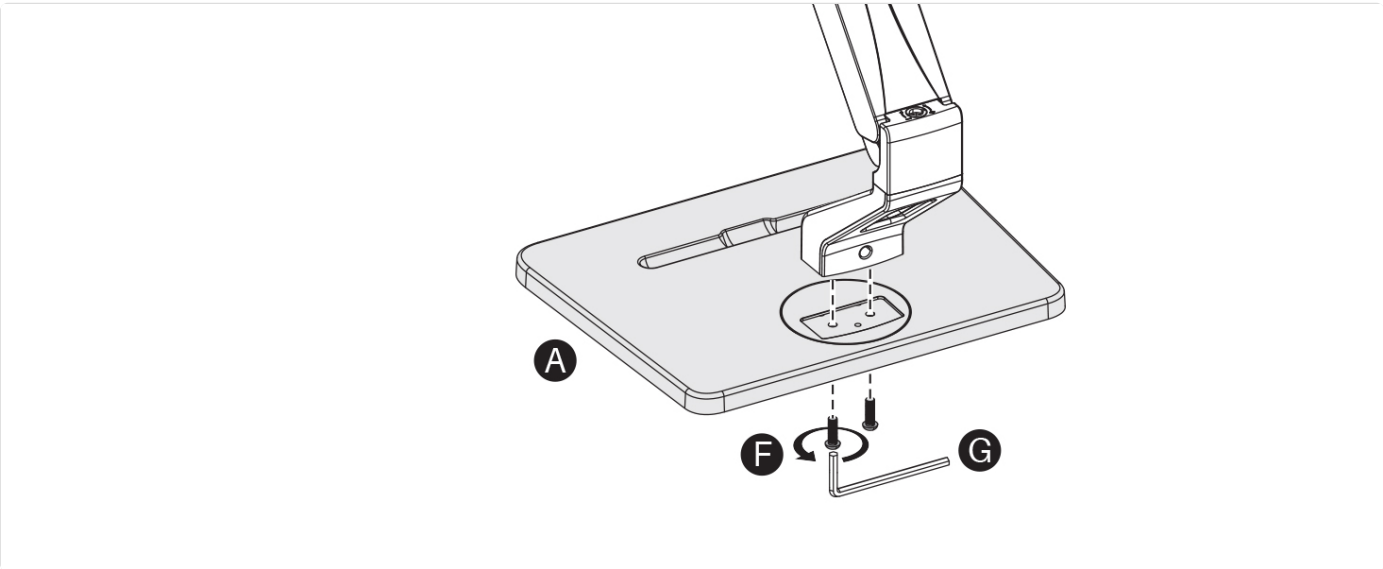

Figure 4: Connect the arm (B) to the support (C) and secure with screws (F) and hex key (G). Note the cable management cover (D) and screw (E).

Step 3: Prepare the VESA Plate for Monitor Attachment

Attach the VESA plate to the back of your monitor using the appropriate M4x12 (M-A) or M5x12 (M-B) screws and D5 washers (M-C). Ensure the screws are tightened securely, leaving a 3mm gap for mounting.

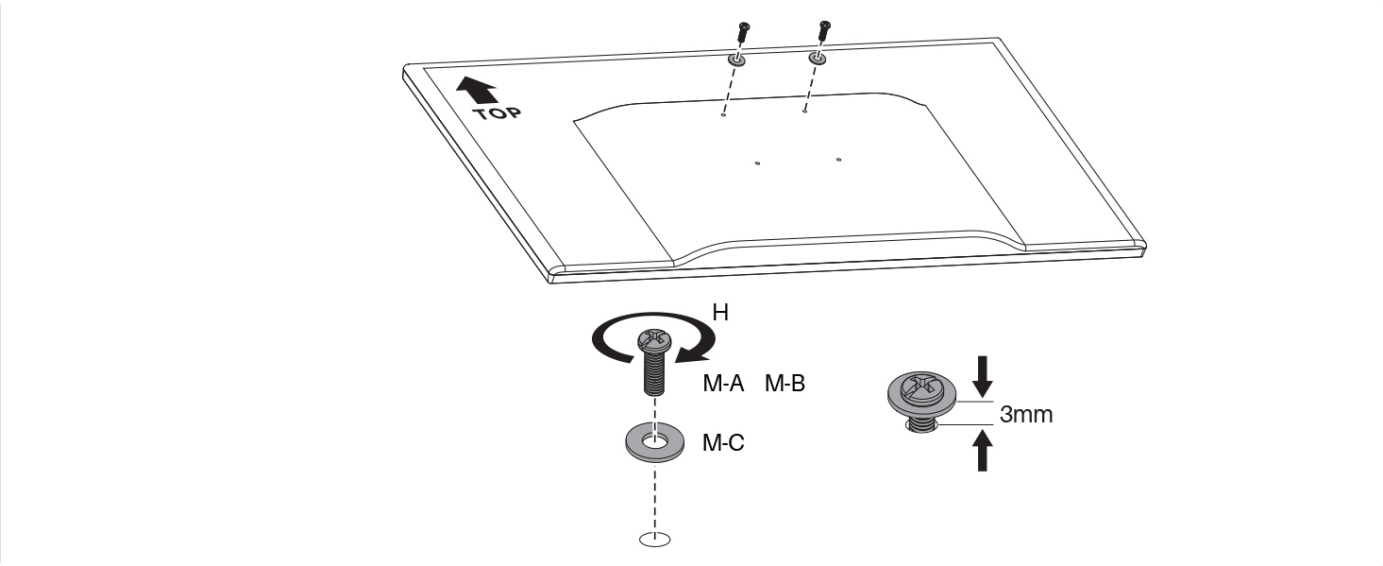

Figure 5: Attach the VESA plate to your monitor using screws (M-A or M-B) and washers (M-C), leaving a 3mm gap.

Step 4: Mount the Monitor to the Arm

Carefully slide the monitor (with the attached VESA plate) onto the arm's VESA connector. Once in place, tighten the locking screw (H) to secure the monitor. It is recommended to have two people for this step to prevent the monitor from sliding down.

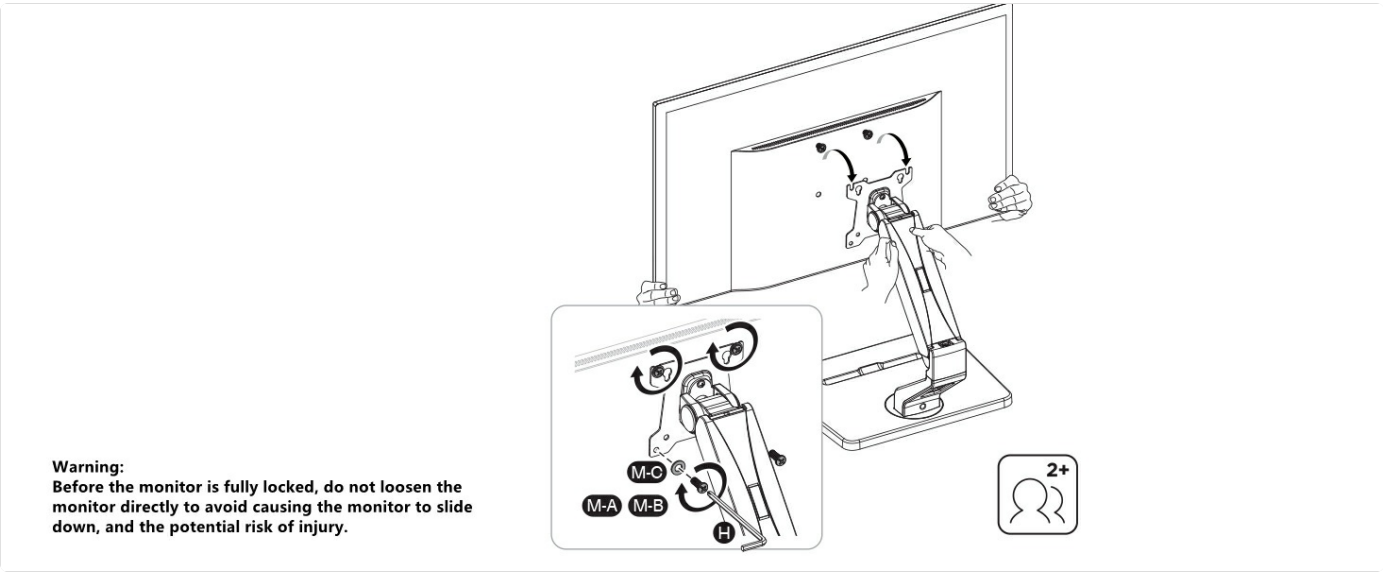

Figure 6: Mount the monitor to the arm and secure it by tightening screw (H). Two people are recommended for this step.

Video Guide: HUION ST500 Monitor Arm Assembly

Video 1: Official video demonstrating the assembly and adjustment of the HUION ST500 monitor arm.

5. Operation

The HUION ST500 monitor arm offers extensive adjustability to optimize your viewing experience.

Adjusting Your View

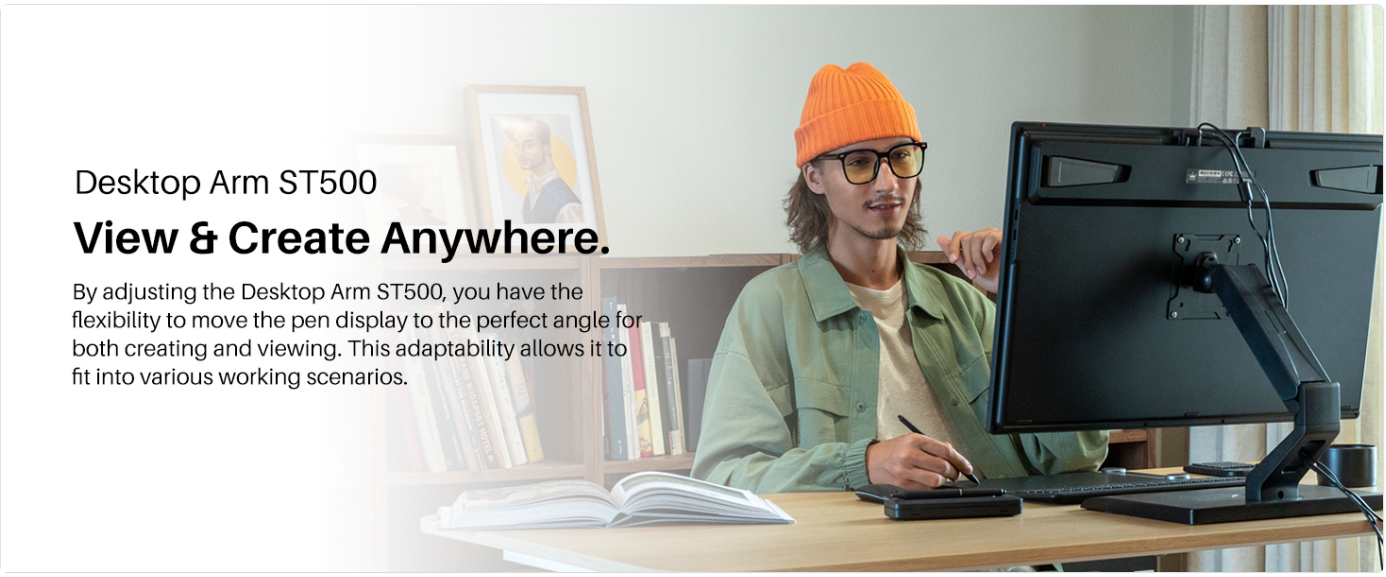

Figure 7: The ST500 allows for flexible positioning for both creation and viewing tasks.

- **Height Adjustment:** The arm can be adjusted vertically from 2.95 inches (75mm) to 12.8 inches (325mm) using the gas spring mechanism. Gently push or pull the monitor to the desired height.
- **Base Rotation:** The joint between the arm and the base allows for a ±40° horizontal rotation.
- **Pitch/Elevation Angles:** The VESA connector can be tilted vertically from +90° to -45°.
- **Screen Rotation:** The monitor can be rotated 360° horizontally, allowing for portrait or landscape orientation.

Figure 8: Detailed view of the monitor arm's adjustable angles and height range.

Cable Management and Pen Holder

The ST500 includes features for a tidy workspace:

- **Cable Tie Slot:** Route your monitor cables through the integrated slot on the arm for a clean setup.
- **Pen Holder:** A dedicated space is provided for storing your HUION pen, preventing loss and keeping your workspace organized.

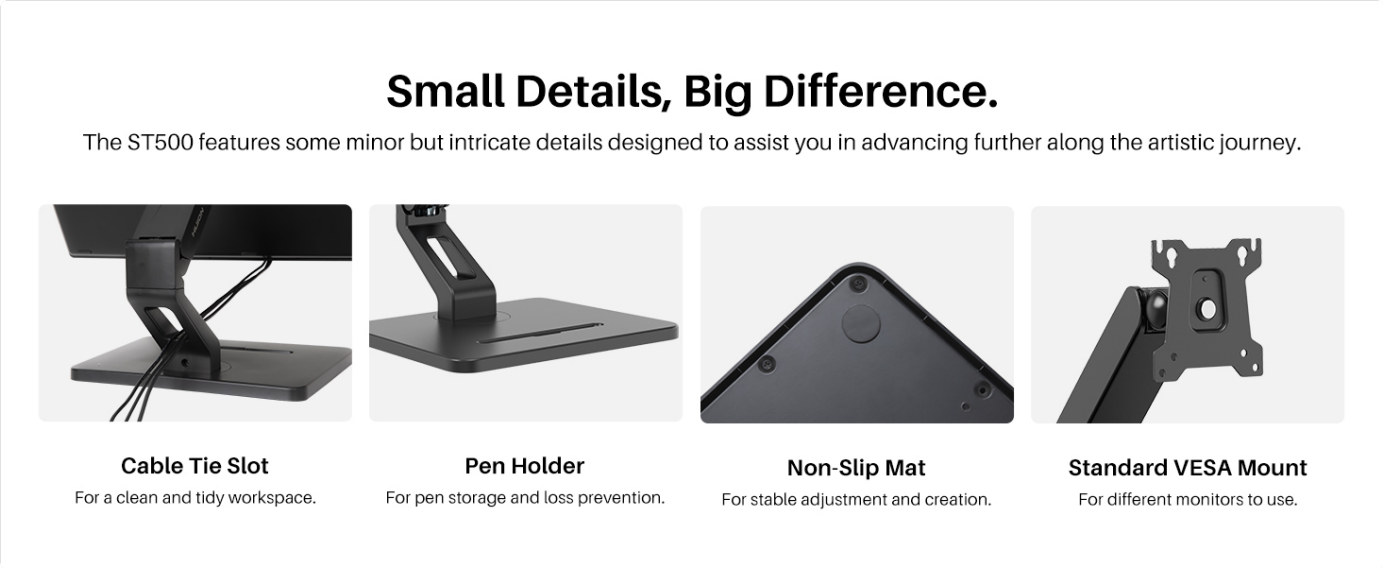

Figure 9: Key features including cable management, pen holder, and non-slip base.

6. Maintenance

Cleaning

Wipe the monitor arm with a soft, damp cloth. Avoid using abrasive cleaners or solvents that may damage the finish.

Tension Adjustment

If the arm feels too stiff or too loose, the gas spring tension can be adjusted. The hinge has two small Phillips screws on its underside that control the tension. Use a screwdriver to turn each screw gradually (e.g., ¼ turn at a time) counter-clockwise to loosen or clockwise to tighten until the desired movement is achieved. Do not fully remove the screws.

7. Troubleshooting

- **Arm is too stiff to move:** Refer to the 'Tension Adjustment' section above. The factory tension might be set too high. Loosen the tension screws gradually.
- **Arm is too loose and doesn't hold position:** Refer to the 'Tension Adjustment' section. Tighten the tension screws gradually. Ensure your monitor's weight is within the specified load-bearing range.
- **Monitor wobbles on the base:** Ensure the base is placed on a flat, stable surface. Check that all assembly screws are securely tightened. The base features a non-slip mat for added stability.
- **Monitor slides down after mounting:** Ensure the VESA plate locking screw (H in Step 4) is fully tightened. Verify that the monitor's weight does not exceed the maximum capacity.

8. Specifications

Feature	Detail

Feature	Detail
Model Number	ST500
Load-Bearing Range	4.4 lbs - 22 lbs (2 kg - 10 kg)
Compatible Screen Size	17" - 32"
VESA Support	75x75mm / 100x100mm
Height Adjustment Range	2.95 in - 12.8 in (75mm - 325mm)
Base Horizontal Rotation	±40°
Pitch/Elevation Angles Adjustment	+90° ~ -45°
Screen Rotation	360°
Net Weight	8.69 lbs (3.94 kg)
Base Size	12.8 in x 0.984 in x 9.84 in (325 x 25 x 250mm)

9. Compatibility

The HUION ST500 is compatible with a wide range of monitors and pen displays that meet the following criteria:

- Screen Size: 17" to 32"
- Weight: 4.4 lbs to 22 lbs (2 kg to 10 kg)
- VESA Mounting Patterns: 75x75mm or 100x100mm

Known compatible HUION models include:

- Kamvas 20, Kamvas 22, Kamvas 22 Plus, Kamvas 24, Kamvas 24 Plus
- Kamvas Pro 19, Kamvas Pro 20, Kamvas Pro 20 (2019), Kamvas Pro 22, Kamvas Pro 22 (2019), Kamvas Pro 24, Kamvas Pro 24 (4K), Kamvas Pro 27

10. Warranty & Support

HUION products are manufactured to high-quality standards. For warranty information, please refer to the warranty card included in your package or visit the official HUION website. If you encounter any issues or have questions regarding your HUION ST500 monitor arm, please contact HUION customer support through their official channels or the retailer where you purchased the product.

For further assistance, please visit the **HUION Store on Amazon**.

© 2024 HUION. All rights reserved.