Saved from manuals.plus.
Open the live page for links to other documents and user manuals.

LEDKIA LIGHTING Stadium 400W (Model: 110463_225062)

LEDKIA LIGHTING Stadium 400W LED Floodlight Instruction Manual

Model: Stadium 400W (110463_225062)

1. Introduction

Thank you for choosing the LEDKIA LIGHTING Stadium 400W LED Floodlight. This high-performance floodlight is designed for robust outdoor and indoor sports lighting applications, offering exceptional luminous flux and energy efficiency. Its modular design ensures ease of installation and maintenance. Please read this manual thoroughly before installation and operation to ensure safe and optimal performance of your product.

2. Safety Instructions

WARNING: Failure to follow these safety instructions may result in fire, electric shock, serious injury, or property damage.

- Always disconnect power before installation, maintenance, or cleaning.
- Installation should be performed by a qualified electrician in accordance with all local and national electrical codes.
- Ensure the mounting surface can support the weight of the floodlight.
- Do not operate the floodlight if any part is damaged.
- Avoid direct eye exposure to the light source when the floodlight is active.
- Ensure proper grounding to prevent electric shock.
- Do not modify the product in any way. Unauthorized modifications may void the warranty and create safety hazards.

3. Package Contents

Carefully unpack the box and ensure all items are present and undamaged. If any items are missing or damaged, contact your retailer.

- LEDKIA LIGHTING Stadium 400W LED Floodlight (modular units)

- Mounting Brackets
- Power Cable
- Instruction Manual

4. Setup and Installation

The floodlight is supplied disassembled and requires assembly of the mounting brackets to the modular units. Follow these steps for proper installation:

1. **Bracket Assembly:** Attach the provided mounting brackets to the floodlight modules using the included hardware. Ensure all connections are secure.
2. **Mounting Location:** Select a suitable mounting location that can safely support the floodlight's weight and provides the desired illumination area.
3. **Secure Mounting:** Securely fasten the floodlight to the chosen surface using appropriate mounting hardware (not included).



Image 1: Front view of the LED floodlight, showing the two modular light units and the adjustable mounting bracket.

4. **Angle Adjustment:** The floodlight features an adjustable bracket. Loosen the adjustment bolts, set the desired illumination angle, and then securely tighten the bolts to fix the position. The side view shows the angle markings for precise adjustment.

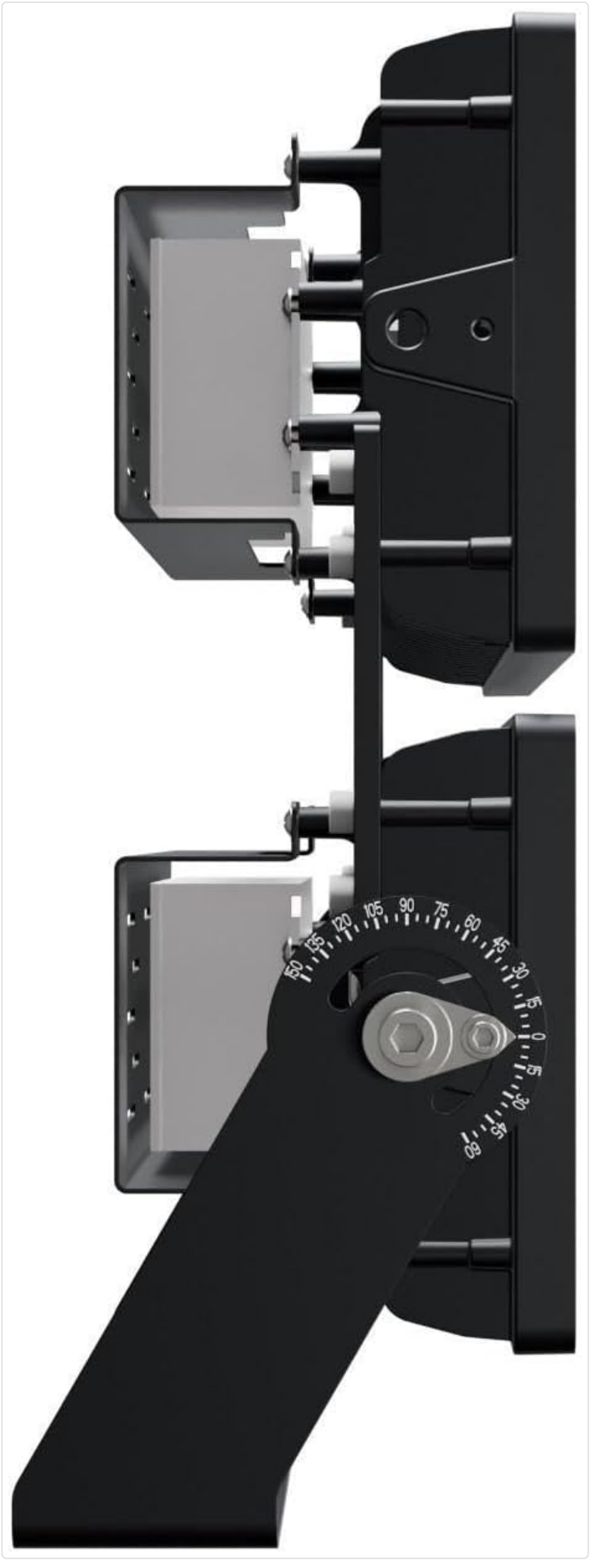

Image 2: Side view illustrating the adjustable angle mechanism on the floodlight bracket.

5. **Electrical Connection:** Connect the provided power cable to a suitable power source. This floodlight supports 0-10V dimming. Ensure all wiring is done by a qualified professional and complies with local electrical codes.



Image 3: Rear view of the floodlight, highlighting the heat dissipation fins and the modular construction of the LED units.

5. Operating Instructions

Once properly installed and connected to power, the floodlight is ready for operation.

- **Power On/Off:** Use the external power switch to turn the floodlight on or off.
- **Dimming Function:** If connected to a compatible 0-10V dimmer, adjust the dimmer control to achieve the desired light intensity.
- **Color Temperature:** This floodlight provides a 3000K Warm White light, suitable for creating a comfortable and inviting atmosphere.

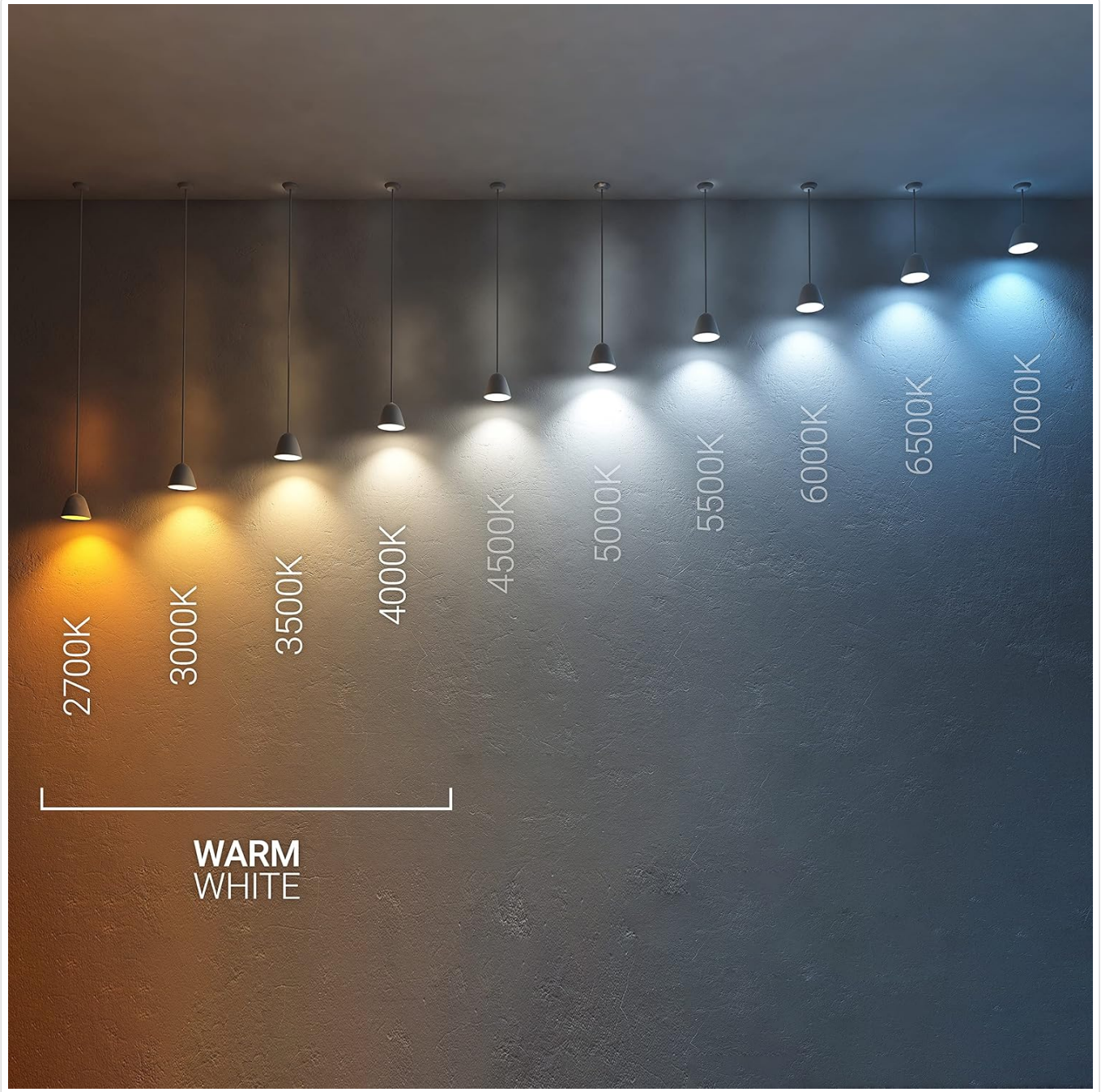

Image 4: Visual representation of different color temperatures, indicating the 3000K Warm White output of this floodlight.

6. Maintenance

The LEDKIA LIGHTING Stadium 400W LED Floodlight is designed for durability and minimal maintenance. However, regular checks can prolong its lifespan and ensure optimal performance.

- **Cleaning:** Periodically clean the floodlight's surface and lens with a soft, damp cloth. Do not use abrasive cleaners or solvents. Ensure the floodlight is off and cool before cleaning.
- **Inspection:** Regularly inspect the floodlight for any signs of damage, loose connections, or wear. Address any issues promptly.
- **Modular Replacement:** Thanks to its modular design, individual 200W modules can be replaced if necessary, rather than replacing the entire unit. Contact qualified personnel for module replacement.



Image 5: The IP66 rating indicates the floodlight's high resistance to dust and water ingress, making it suitable for outdoor use.

7. Troubleshooting

If you encounter issues with your floodlight, refer to the following common problems and solutions:

- **Light Not Turning On:**
  - Check the power supply and ensure it is connected correctly.
  - Verify that the external switch is in the 'ON' position.
  - Inspect the wiring for any loose connections or damage.
- **Dimming Not Working:**
  - Ensure the 0-10V dimmer is compatible and correctly wired.
  - Check the dimmer control for proper operation.
- **Reduced Brightness:**

- Clean the lens surface to remove any dirt or debris.
- If using a dimmer, ensure it is set to maximum brightness.

If the problem persists after attempting these solutions, please contact customer support.

8. Specifications

Feature	Specification
Brand	LEDKIA LIGHTING
Model Number	110463_225062
Power	400 W (2 x 200W modules)
Luminous Flux	60000 lm
Luminous Efficacy	160 lm/W
Color Temperature	3000K (Warm White)
Beam Angle	60°
Dimmable	Yes (0-10V)
IP Rating	IP66
Material	Aluminum
Dimensions	34 x 35.1 x 11.5 cm
Weight	5.05 kg
Power Source	Wired Electric
Included Items	Power Cable

9. Warranty and Support

LEDKIA LIGHTING products are manufactured to high-quality standards. For warranty information, please refer to the terms and conditions provided at the time of purchase or contact your retailer. If you require technical assistance or have questions not covered in this manual, please contact LEDKIA LIGHTING customer support through their official channels or your point of purchase.

Ask a question about this manual

Ask about setup, troubleshooting, compatibility, parts, safety, or missing instructions. Manuals+ will review the question and use this page's manual context to help answer it.

Name

Anonymous

Email

you@example.com

After a successful submission, we securely hash the supplied account or form email before sending it to Microsoft Advertising for conversion attribution. Privacy details.

Question

Example: How do I reset this device or fix this error?

Details

Model number, symptoms, what you tried, or the section of the manual you are using.

Submit question

Open the live page

https://manuals.plus/asin/B0CSG3LQWF

More documents and user manuals: **https://manuals.plus/**