**Saved from manuals.plus.**
**Open the live page for links to other documents and user manuals.**



### Garvee 3 Point Quick Hitch

# GARVEE 3 Point Quick Hitch Category 1 User Manual

Model: 3 Point Quick Hitch

## 1. Introduction

Thank you for choosing the GARVEE 3 Point Quick Hitch. This manual provides essential information for the safe and efficient setup, operation, and maintenance of your new quick hitch. Please read this manual thoroughly before installation and use, and keep it for future reference.

The GARVEE 3 Point Quick Hitch is designed to simplify the connection of Category 1 and Category 2 implements to your tractor's 3-point hitch system, significantly reducing the time and effort required for attachment and detachment.




Figure 1.1: GARVEE 3 Point Quick Hitch installed on a tractor.

## 2. Safety Information

Always prioritize safety when operating heavy machinery and attachments. Failure to follow these safety guidelines may result in serious injury or property damage.

- **Read the Tractor Manual:** Always consult your tractor's owner's manual for specific safety instructions related to operating 3-point hitches and attachments.
- **Personal Protective Equipment (PPE):** Wear appropriate PPE, including safety glasses, gloves, and sturdy footwear, when installing, operating, or maintaining the quick hitch.
- **Clear Work Area:** Ensure the area around the tractor and implement is clear of bystanders, especially children and pets, during connection and operation.
- **Secure Connections:** Always ensure all pins, clips, and locking mechanisms are fully engaged and secure before operating the tractor with an attached implement.
- **Rated Capacity:** Do not exceed the maximum lifting capacity of 3000 lbs for this quick hitch or the lifting capacity of your tractor, whichever is lower.
- **Stable Ground:** Connect and disconnect implements on level, stable ground with the tractor engine off and parking brake engaged.
- **Inspect Before Use:** Before each use, inspect the quick hitch for any signs of wear, damage, or loose components. Do not use if damaged.
- **Transport Safety:** When transporting implements, ensure they are raised to a safe height and secured. Drive at appropriate speeds for conditions.

## 3. Package Contents

Upon unpacking, please verify that all components are present and undamaged:

- 1 x GARVEE 3 Point Quick Hitch

If any parts are missing or damaged, please contact customer support immediately.

## 4. Product Overview and Features

The GARVEE 3 Point Quick Hitch is constructed from reinforced alloy steel with a powder-coated finish for durability and corrosion resistance. Key features include:

- **Wide Compatibility:** Designed for Category 1 and Category 2 tractors.
- **Adjustable Top Hook:** Features a 5-level adjustable top hook for versatile implement attachment.
- **Quick Connection System:** Allows for fast and effortless implement changes.
- **Reinforced Construction:** Utilizes a reinforced triangular structure and 0.16-inch thick steel plates for enhanced stability and a 3000 lbs tensile strength.
- **Easy Operation:** Pin hook lock and release levers provide secure locking and easy control of lower lift pins.




Figure 4.1: Key adjustable features of the quick hitch, including the 5-level adjustable top hook and pin hook lock and release levers.




Figure 4.2: Reinforced triangular welding fixation and thickened steel for enhanced durability and stability.

## 5. Specifications

| Attribute | Value |
|---|---|
| Brand | Garvee |
| Model Number | 3 Point Quick Hitch |
| Material | Alloy Steel |
| Finish Type | Powder Coated |
| Maximum Pull Force / Lifting Capacity | 3000 pounds |
| Vehicle Service Type | Tractor |

| | |
|---|---|
| Compatibility | Category 1 and Category 2 Tractors |
| Unit Count | 1 Count |




Figure 5.1: Dimensional drawing of the GARVEE 3 Point Quick Hitch.

## 6. Setup and Installation

Follow these steps to properly install the GARVEE 3 Point Quick Hitch onto your tractor:

1. **Prepare Tractor:** Park your tractor on a level surface, engage the parking brake, and turn off the engine. Ensure the tractor's 3-point hitch arms are lowered.
2. **Position Quick Hitch:** Align the GARVEE Quick Hitch with your tractor's lower lift arms.
3. **Connect Lower Arms:** Attach the tractor's lower lift arms to the corresponding pins on the quick hitch. Secure them with appropriate linchpins or clips.
4. **Connect Top Link:** Adjust the tractor's top link to align with the adjustable top hook of the quick hitch. Connect

the top link and secure it with its pin.

5. **Adjust Top Hook (if necessary):** The quick hitch's top hook is adjustable in 5 levels. Select the appropriate height to ensure proper implement geometry and clearance. Secure the top hook with its bolts.
6. **Verify Connections:** Double-check all connections to ensure they are secure and all pins and clips are properly installed.




Figure 6.1: Installation diagram illustrating the connection points for the quick hitch.

## 7. Operation

Once the quick hitch is installed on your tractor, connecting implements becomes a streamlined process:

1. **Prepare Implement:** Ensure the implement's pins are clean and free of debris.
2. **Position Tractor:** Slowly back the tractor towards the implement, aligning the quick hitch's lower hooks with the implement's lower pins.
3. **Engage Lower Pins:** Use the tractor's 3-point hitch controls to carefully lower the quick hitch until its lower hooks engage with the implement's lower pins.
4. **Lock Lower Pins:** Once engaged, use the pin hook lock and release levers on the quick hitch to secure the implement's lower pins. Pull the lever to lock the hooks, preventing detachment.
5. **Connect Implement Top Link:** Raise the 3-point hitch slightly to align the implement's top link with the quick hitch's top hook. Connect the implement's top link to the quick hitch's top hook and secure it with its pin.
6. **Verify Connection:** Ensure all connections are secure and the implement is stable before operating.

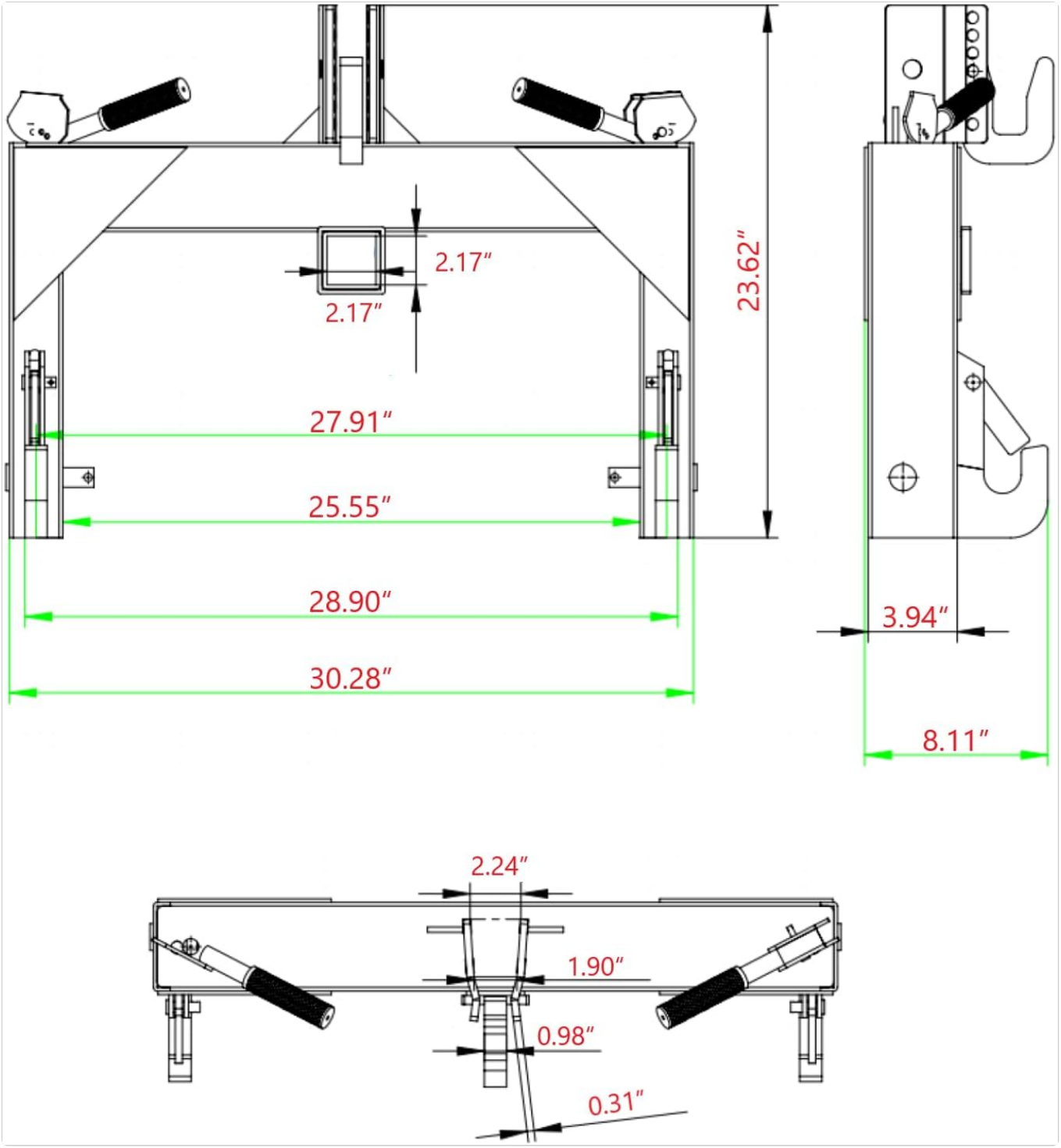


Figure 7.1: The lock and release control lever for securing implement pins.

## 8. Maintenance

Regular maintenance will extend the life and ensure the safe operation of your GARVEE 3 Point Quick Hitch.

- **Cleaning:** After each use, clean the quick hitch to remove dirt, mud, and debris.
- **Lubrication:** Periodically lubricate pivot points and moving parts with appropriate grease to ensure smooth operation and prevent rust.
- **Inspection:** Regularly inspect the quick hitch for signs of wear, cracks, bends, or damage to the steel frame, welds, pins, and locking mechanisms.
- **Fastener Check:** Ensure all bolts, nuts, and pins are tight and secure. Replace any worn or damaged fasteners immediately.

- **Rust Prevention:** Touch up any areas where the powder coating is chipped or scratched to prevent rust.
- **Storage:** Store the quick hitch in a dry, protected area when not in use to prevent corrosion.

## 9. Troubleshooting

If you encounter issues with your quick hitch, refer to the following common problems and solutions:

| Problem | Possible Cause | Solution |
|---|---|---|
| Difficulty connecting implement lower pins | Misalignment; debris in hooks; implement pins too wide/narrow | Adjust tractor position; clean hooks/pins; verify implement pin spacing is compatible. |
| Lower pins not locking securely | Debris in locking mechanism; worn locking lever/pin; improper engagement | Clean mechanism; ensure pins are fully seated; inspect for damage and replace parts if necessary. |
| Top link connection issues | Top hook height incorrect; tractor top link not adjusted | Adjust the 5-level top hook on the quick hitch; adjust the length of your tractor's top link. |
| Excessive play or instability | Loose connections; worn pins/bushings; damaged frame | Check all pins and bolts for tightness; inspect for wear and replace components; discontinue use if frame is damaged. |

## 10. Warranty and Support

**Manufacturer Warranty:** This GARVEE product comes with a 7-day return guarantee for quality issues. Please retain your proof of purchase for warranty claims.
**Customer Support:** For any questions, technical assistance, or warranty claims, please contact GARVEE customer support through your original point of purchase or visit the official Garvee Store on Amazon: Garvee Store.

© 2024 GARVEE. All rights reserved.

### Ask a question about this manual

Ask about setup, troubleshooting, compatibility, parts, safety, or missing instructions. Manuals+ will review the question and use this page's manual context to help answer it.

**Name**

Anonymous

**Email**

you@example.com

After a successful submission, we securely hash the supplied account or form email before sending it to Microsoft Advertising for conversion attribution. Privacy details.

**Question**

Example: How do I reset this device or fix this error?

**Details**

Model number, symptoms, what you tried, or the section of the manual you are using.

**Submit question**

---

**Open the live page**

**https://manuals.plus/asin/B0CS2VLPGS**

More documents and user manuals: **https://manuals.plus/**