Saved from manuals.plus.
Open the live page for links to other documents and user manuals.

Tzone THT02

Tzone THT02 RS485 Temperature and Humidity Sensor User Manual

Model: THT02

1. Introduction

This manual provides instructions for the installation, operation, and maintenance of the Tzone THT02 RS485 Temperature and Humidity Sensor. This industrial-grade sensor is designed for accurate environmental monitoring in various applications.

▶ **Watch video online**
Temperature Humidity Transmitter with RS485 Output

Video: Overview of the Tzone THT02 RS485 Temperature and Humidity Transmitter. This video demonstrates the physical appearance and key features of the sensor.

The THT02 sensor is suitable for industrial, HVAC, communication rooms, warehouses, and automatic control systems.



Image: The Tzone THT02 sensor shown in various application environments including libraries, laboratories, meteorological stations, workshops, HVAC systems, warehouses, and computer facilities. This illustrates the versatility of the sensor.

2. Product Features

- **High Accuracy Sensor:** Utilizes the SHT30 CMOS chip for stable performance in high humidity environments.
- **RS485 Communication:** Features an RS485 interface with Modbus-RTU protocol for reliable data transmission over long distances (up to 1200 meters).
- **DIP Switch for Address Setting:** Allows easy configuration of sensor addresses for multi-sensor monitoring.
- **Wide Measurement Range:** Temperature from -40°C to 125°C (-40°F to 257°F) and humidity from 5% to 95% RH.
- **IP65 Waterproof Rating:** Provides protection against dust and water ingress, suitable for various industrial settings.
- **Compact Design:** Small size and light weight for easy installation and space-saving.

3. Package Contents

Please check the package for the following items:

- Tzone THT02 RS485 Temperature and Humidity Sensor
- Mounting Bracket
- Mounting Screws
- Quality Certificate



Image: Contents of the Tzone THT02 package, including the sensor unit with its cable, a mounting bracket, screws, and a quality certificate.

4. Setup and Installation

4.1 Component Identification

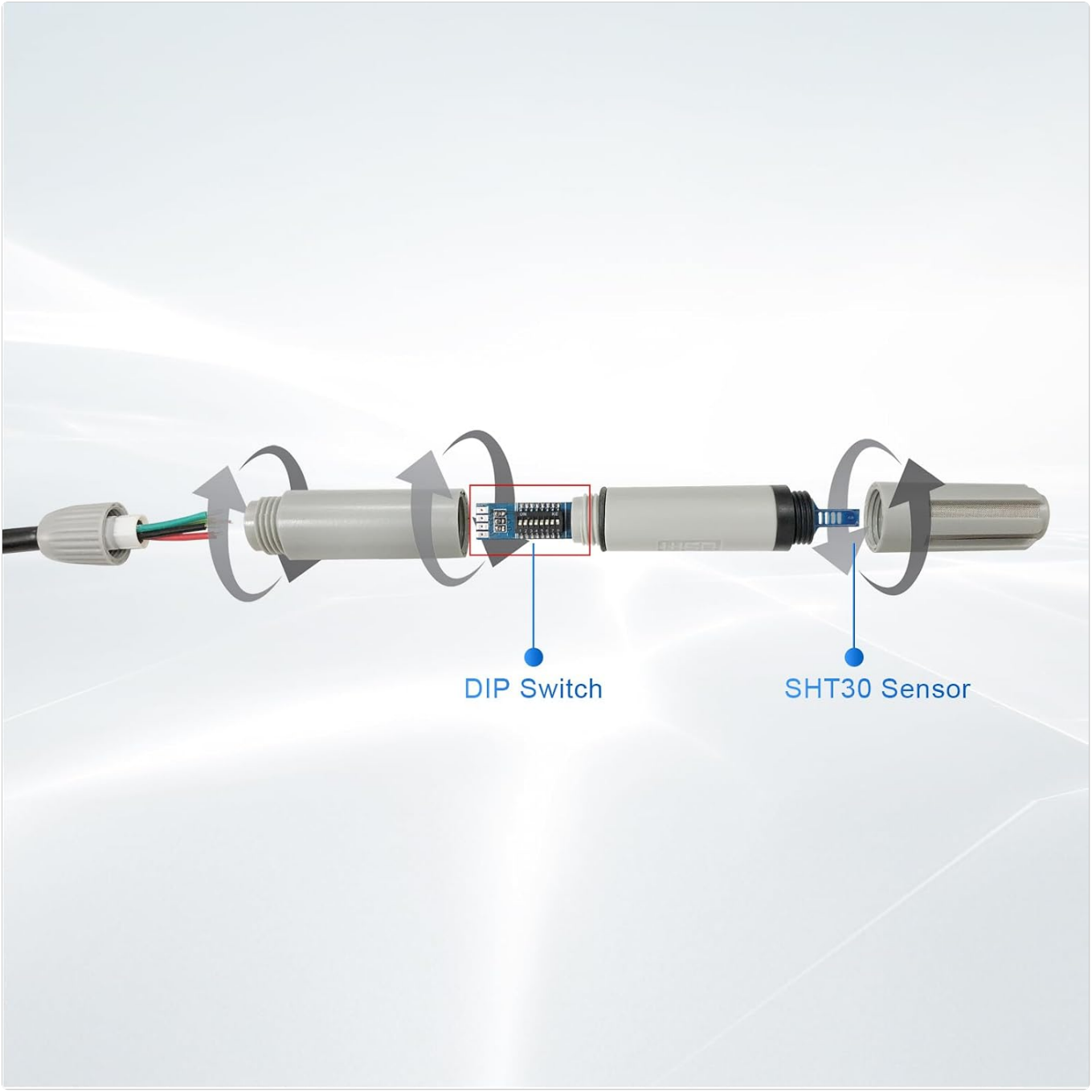

Image: Exploded view of the Tzone THT02 sensor showing the internal DIP switch for address configuration and the SHT30 sensor element. Arrows indicate the assembly direction.



Image: Detailed view of the Tzone THT02 sensor with key components labeled: Stainless Steel Filter, Temp and RH Sensor, Wiring, Mounting Holes, Standard 1M Wire, and Waterproof Terminal.

4.2 Wiring Instructions

Connect the sensor to your RS485 network according to the following color code:

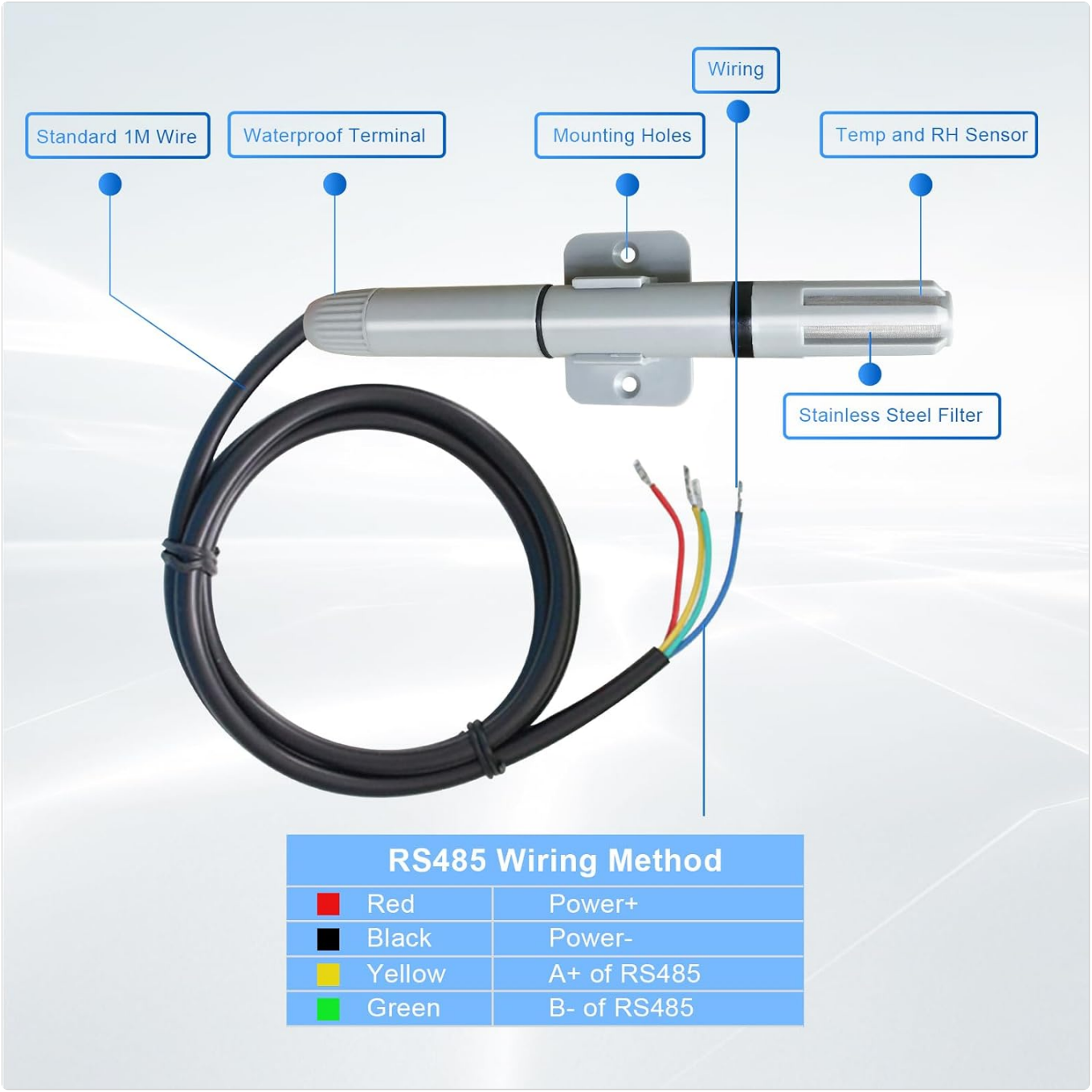

Image: Wiring diagram for the Tzone THT02 sensor. The table shows Red wire for Power+, Black for Power-, Yellow for A+ of RS485, and Green for B- of RS485. The sensor also shows its components: Standard 1M Wire, Waterproof Terminal, Mounting Holes, Wiring, Temp and RH Sensor, and Stainless Steel Filter.

Wire Color	Function
Red	Power+ (DC 5-12V)
Black	Power- (GND)
Yellow	A+ of RS485
Green	B- of RS485

Important: Do not work under 24V DC.

4.3 DIP Switch Configuration

The DIP switch located inside the sensor housing is used to set the Modbus address for the device. This is crucial

when multiple sensors are connected to the same RS485 bus. Refer to the Modbus protocol documentation for specific address settings.

4.4 Network Connection

The sensor can be connected to a PC or other monitoring devices via an RS485 to USB/Ethernet converter. Ensure proper termination resistors are used in the RS485 bus if required by your network topology.

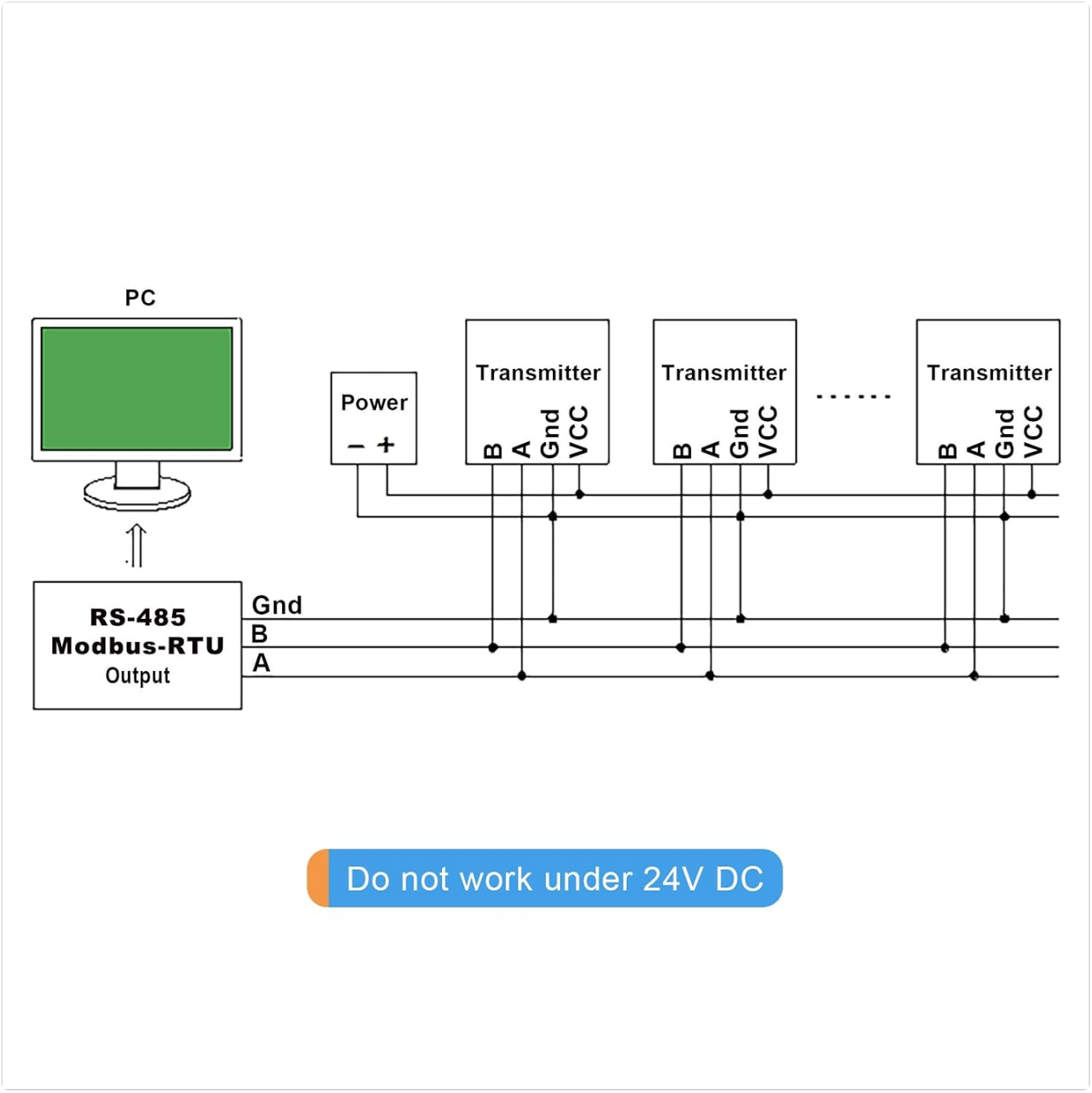

Image: Diagram illustrating how multiple Tzone THT02 transmitters are connected in parallel to an RS-485 Modbus-RTU output device (e.g., a PC via a converter). Power connections (VCC, Gnd) and data lines (A, B) are shown for each transmitter.



*Image: System diagram showing multiple Tzone THT02 sensors (*1 to *6) connected to an RS485 converter, which then interfaces with a computer running a supervisory service via the internet. This setup allows for remote monitoring of multiple sensors.*

5. Operating Instructions

Once properly installed and powered, the THT02 sensor will begin measuring temperature and humidity. Data can be read by sending Modbus RTU commands to the sensor's configured address.

- **Data Acquisition:** Use Modbus master software or a PLC to send read commands to the sensor's Modbus address.
- **Register Map:** Refer to the Tzone Modbus RTU protocol documentation (usually provided separately or available from the manufacturer's website) for the specific register addresses for temperature and humidity data.
- **Multi-Sensor Monitoring:** With unique Modbus addresses set via the DIP switches, multiple THT02 sensors can be monitored simultaneously on a single RS485 bus.

6. Maintenance

- **Sensor Cleaning:** Periodically inspect the stainless steel filter and the sensor element for dust or debris. Clean gently with a soft brush or compressed air if necessary. Avoid using harsh chemicals or abrasive materials.
- **Environmental Protection:** While the sensor is IP65 rated, avoid prolonged exposure to extreme conditions beyond its specified operating range.
- **Cable Inspection:** Check the sensor cable and connections periodically for any signs of wear, damage, or corrosion.

7. Troubleshooting

Problem	Possible Cause	Solution
No data reading / Communication error	Incorrect wiring; Incorrect Modbus address; Power supply issue; RS485 converter issue; Software configuration error.	Verify wiring (Power+, Power-, A+, B-); Check DIP switch settings for Modbus address; Ensure DC 5-12V power is supplied; Test RS485 converter; Confirm Modbus software settings (baud rate, parity, stop bits).
Inaccurate temperature/humidity readings	Sensor element dirty or obstructed; Sensor placed in an unrepresentative location; Sensor damage.	Clean the sensor filter and element; Relocate the sensor to an area that accurately reflects the environment to be measured; If damage is suspected, contact support.
Intermittent communication	Loose connections; Electrical interference; Improper RS485 bus termination.	Secure all wiring connections; Ensure proper grounding; Use shielded cables; Check for correct termination resistors on the RS485 bus.

8. Specifications



Image: Diagram showing the dimensions of the Tzone THT02 sensor (140mm length, 16mm diameter) and a table of its RS485 specifications including Supply Voltage, Current, Transmission Rate, and Measuring Range for both temperature and humidity.

Parameter	Value
Model	THT02
Output Interface	RS485 (Modbus-RTU Protocol)
Temperature Measurement Range	-40℃ to 125℃ (-40℉ to 257℉)
Temperature Accuracy	±0.3℃ (0~60℃)
Humidity Measurement Range	5% to 95% RH
Humidity Accuracy	±3% RH (20%~80% RH)
Supply Voltage	DC 5V to 12V
Current Consumption	5mA

Parameter	Value
Transmission Rate (Optional)	4800 bps / 9600 bps / 19200 bps
Response Time	Approximately 8 seconds
Protection Rating	IP65 Waterproof
Cable Length	Standard 1 Meter
Dimensions	140mm (Length) x 16mm (Diameter)

9. Warranty and Support

For warranty information and technical support, please refer to the documentation included with your product or visit the official Tzone website. Keep your purchase receipt for warranty claims.
Tzone Official Website: Visit the Tzone Store on Amazon

© 2023 Tzone. All rights reserved.

Ask a question about this manual

Ask about setup, troubleshooting, compatibility, parts, safety, or missing instructions. Manuals+ will review the question and use this page's manual context to help answer it.

Name

Anonymous

Email

you@example.com

After a successful submission, we securely hash the supplied account or form email before sending it to Microsoft Advertising for conversion attribution. Privacy details.

Question

Example: How do I reset this device or fix this error?

Details

Model number, symptoms, what you tried, or the section of the manual you are using.

Submit question

Open the live page

https://manuals.plus/asin/B0CP7PLP6C

More documents and user manuals: **https://manuals.plus/**