Manuals+
Q & A | Deep Search | Upload

Linique Full Grey (ASIN: B0CP11577D)

Linique Full Size Murphy Bed User Manual

Brand: Linique | **Model:** Full Grey (ASIN: B0CP11577D)

Important Safety Information

WARNING: Always follow assembly instructions carefully to prevent instability. Do not exceed the maximum weight capacity of 275 pounds. Be cautious of sharp edges when using and assembling the product. Ensure all fasteners are securely tightened before use. Keep children and pets away during assembly.

Product Overview

The Linique Full Size Murphy Bed is a versatile and space-saving furniture solution designed for modern living spaces. It seamlessly transforms from a compact cabinet into a comfortable full-size bed, making it ideal for home offices, guest rooms, or small apartments. This innovative design maximizes floor space when the bed is not in use, providing a functional and aesthetic addition to any room.

Figure 1: Linique Full Size Murphy Bed in Bed Configuration

Figure 2: Linique Full Size Murphy Bed in Cabinet Configuration

Key Features:

- **Space-Saving Design:** Transforms from a full-size bed into a compact cabinet, ideal for optimizing room space.
- **Built-in Dual Power/USB Module:** Conveniently located power outlets and USB ports for charging devices.
- **Two Movable Desks:** Sliding shelves on each side of the headboard provide additional surface area for lamps, books, or personal items.
- **Durable Construction:** Made from wood with a grey finish, ensuring stability and longevity.

Specifications

Feature	Detail
Size (Bed)	75.4"L x 54.7"W x 45.9"H

Feature	Detail
Size (Cabinet)	23.2"L x 54.7"W x 45.2"H
Color	Grey
Finish Type	Painted
Included Components	USB Port, Removable Shelves
Compatible Mattress Size	Full
Assembly Required	Yes
Item Weight	160 pounds
Maximum Weight Capacity	275 pounds

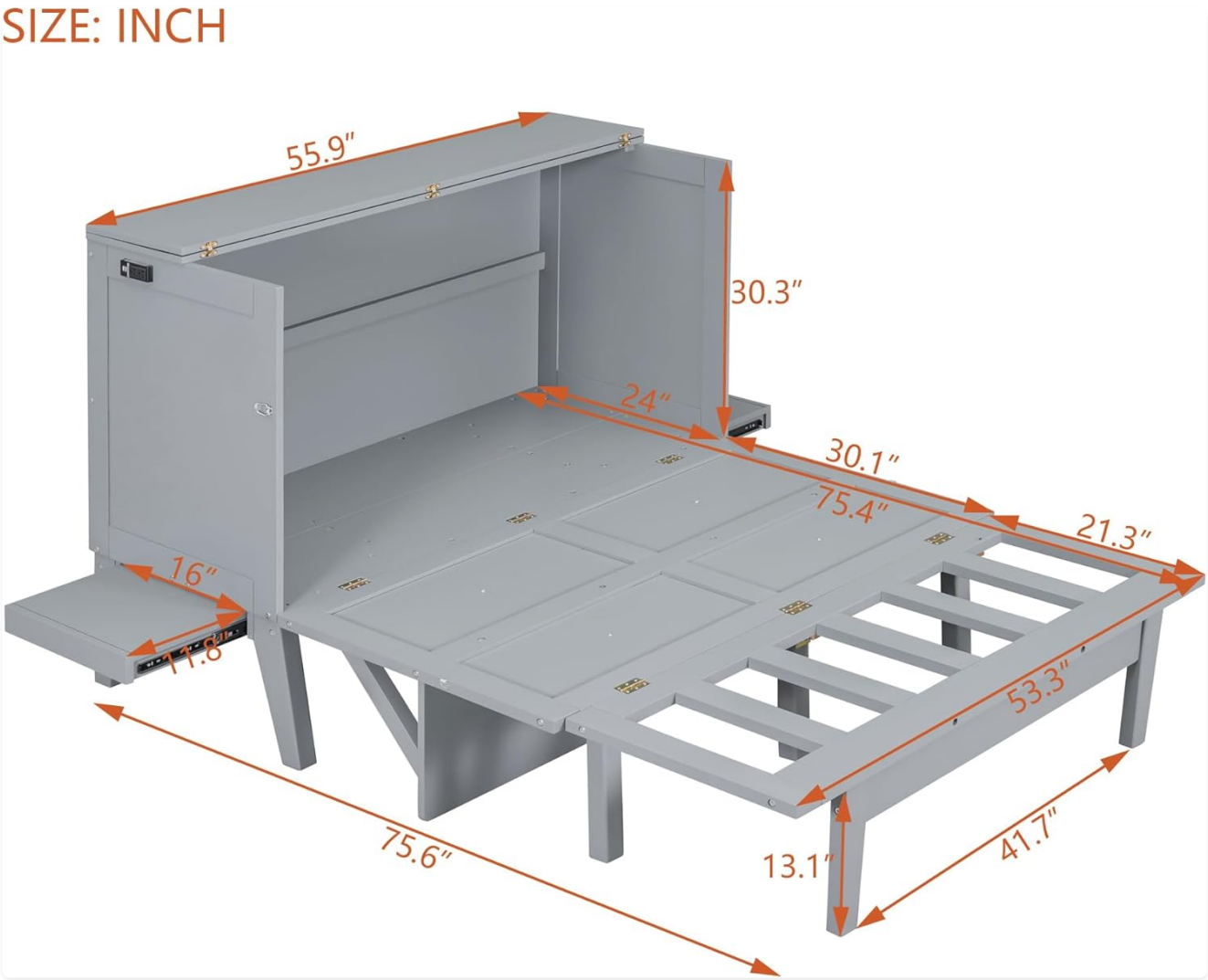

Figure 3: Product Dimensions

Setup and Assembly

The Linique Full Size Murphy Bed requires assembly. Please ensure you have all components and tools as listed in the packaging before beginning. Follow the step-by-step instructions provided in the separate assembly manual included with your product. It is recommended to have two adults for assembly to ensure safety and ease of

construction.

Familiarize yourself with the main components and their transformation. The bed frame folds out from the cabinet structure.

Figure 4: Internal Folding Mechanism

Ensure all screws, bolts, and connectors are tightened securely at each stage of assembly. Do not overtighten. Once assembled, verify the stability of the unit before placing a mattress on it.

Operating Instructions

Converting from Cabinet to Bed:

1. Ensure the area in front of the cabinet is clear of obstructions.
2. Gently pull the front panel of the cabinet downwards. The bed frame will begin to unfold.
3. Continue to lower the bed frame until it is fully extended and the support legs are securely on the floor.
4. Adjust the mattress if necessary.

Converting from Bed to Cabinet:

1. Remove any bedding or pillows that might obstruct the folding mechanism.
2. Lift the bed frame from the foot end, guiding it upwards.
3. As you lift, the bed frame will fold inward, and the support legs will retract.
4. Push the front panel upwards until it securely latches into the cabinet position.

Using the Built-in Dual Power/USB Module:

The Murphy bed is equipped with a power/USB module located on the side of the cabinet. This allows for convenient charging of electronic devices.

Figure 5: Dual Power/USB Module

- Plug the bed's power cord into a standard wall outlet.
- Connect your devices to the available AC outlets or USB ports.
- Do not overload the module. Refer to the module's specifications for maximum power output.

Using the Movable Desks (Shelves):

Two movable desks are integrated into the design, sliding out from the sides of the headboard.

Figure 6: Movable Sliding Shelf

- To extend a desk, gently pull it outwards from the side of the cabinet.
- To retract, push the desk back into the cabinet until it is flush.
- Avoid placing excessively heavy items on the desks to prevent damage to the runners.

Maintenance

- **Cleaning:** Wipe surfaces with a soft, damp cloth. Avoid harsh chemicals or abrasive cleaners that may damage the finish.
- **Hardware Inspection:** Periodically check all screws, bolts, and fasteners to ensure they remain tight. Retighten as necessary to maintain stability.
- **Mechanism Care:** Keep the folding mechanism free of dust and debris. Lubricate moving parts with a silicone-based spray if they become stiff, ensuring not to get lubricant on wood surfaces.
- **Weight Limit:** Adhere strictly to the maximum weight capacity of 275 pounds to prevent structural damage.

Troubleshooting

Problem	Possible Cause	Solution
Bed does not fold/unfold smoothly.	Obstruction in mechanism; loose hardware; lack of lubrication.	Check for foreign objects. Ensure all bolts are tight. Apply silicone lubricant to moving parts.
USB ports/power outlets not working.	Power cord not plugged in; module malfunction; overloaded circuit.	Verify power cord connection. Test with another device. Reduce number of connected devices. Contact support if issue persists.
Sliding desks are stiff or stuck.	Debris in runners; damaged runners.	Clean runners thoroughly. Apply silicone lubricant. If damaged, contact customer support for replacement parts.
Unit feels unstable.	Loose assembly hardware; uneven floor.	Re-check and tighten all assembly hardware. Ensure the unit is placed on a flat, level surface.

Warranty and Customer Support

For information regarding product warranty, please refer to the warranty card included with your purchase or visit the official Linique website.

If you encounter any issues not covered in this manual or require further assistance, please contact Linique customer support.

Website: www.linique.com (*Note: This is a placeholder URL, please refer to actual product documentation for correct contact information.*)

Email: support@linique.com (*Note: This is a placeholder email, please refer to actual product documentation for correct contact information.*)

Phone: 1-800-XXX-XXXX (*Note: This is a placeholder number, please refer to actual product documentation for correct contact information.*)

© 2023 Linique. All rights reserved.