Flysky FS-R4M

Flysky FS-R4M 2.4GHz 4-Channel ANT Protocol RC Receiver Instruction Manual

Model: FS-R4M

1. Introduction

The Flysky FS-R4M is a compact 4-channel mini receiver designed for use with RC models, specifically mini and micro cars. It operates on the 2.4GHz ISM band using the advanced ANT protocol, offering reliable bidirectional communication. This receiver features a single external antenna and provides PWM output for control signals.

It is compatible with Flysky transmitters that support the ANT protocol, such as the FS-G7P. Its ultra-small size and lightweight design make it an ideal choice for applications where space and weight are critical considerations.

2. Features

- **4-Channel Output:** Provides four independent PWM channels for controlling various functions.
- **ANT Protocol:** Utilizes the advanced ANT 2.4GHz protocol for stable and efficient communication.
- **Bidirectional Transmission:** Supports two-way communication between the receiver and compatible transmitter.
- **Single External Antenna:** Ensures reliable signal reception.
- **Compact Design:** Ultra-small dimensions (20.0 x 13.0 x 7.2mm) and lightweight (3g) for easy integration into mini/micro RC models.
- **Wide Compatibility:** Designed for use with Flysky ANT protocol transmitters, such as the FS-G7P.
- **Easy Binding:** Facilitates quick and straightforward pairing with compatible transmitters.
- **Online Update Support:** Allows for firmware updates to enhance performance and features.

3. Product Overview

Familiarize yourself with the components and layout of the FS-R4M receiver.

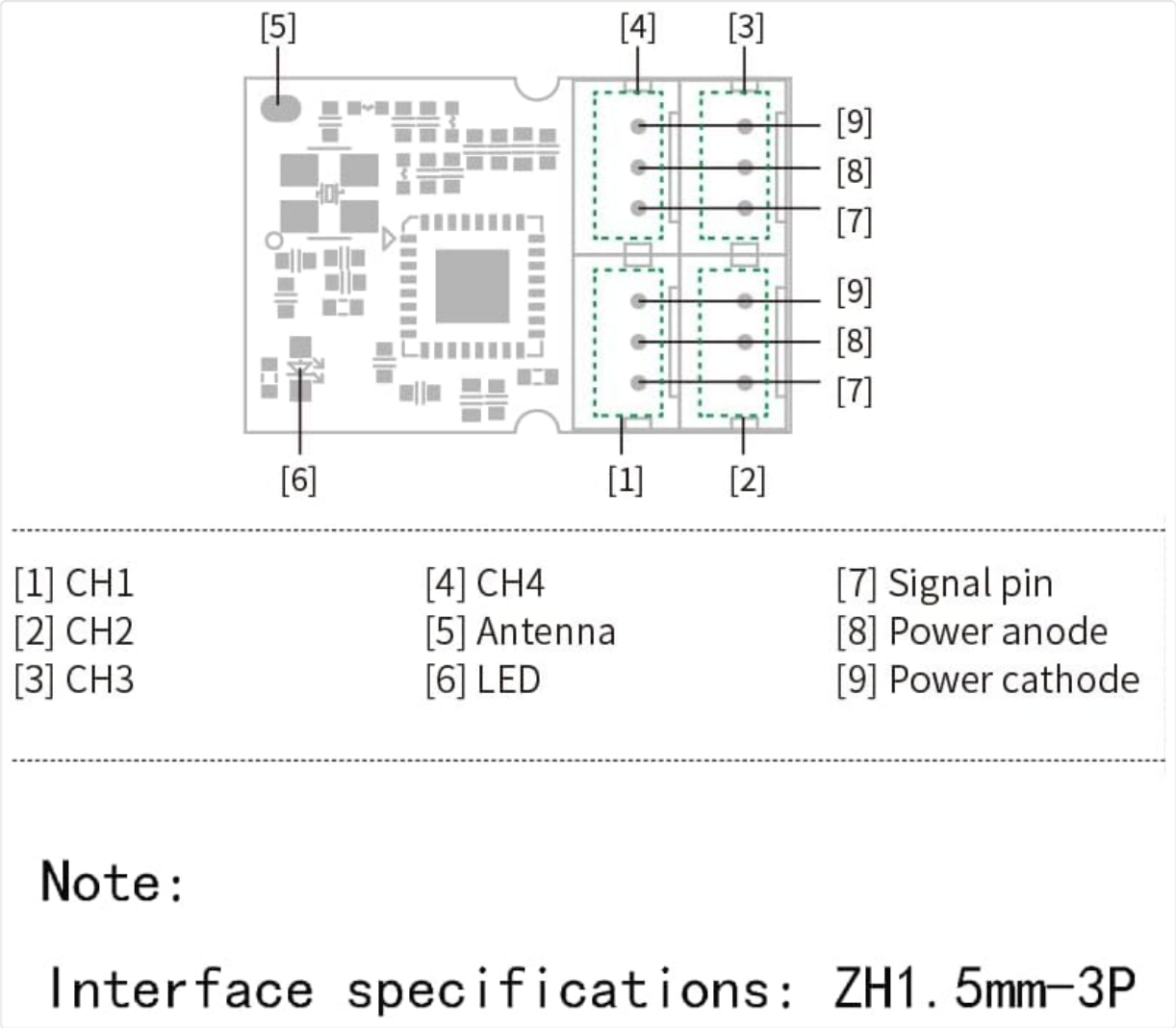

Figure 1: FS-R4M Receiver Component Diagram

[1] CH1: Channel 1 PWM Output

[2] CH2: Channel 2 PWM Output

[3] CH3: Channel 3 PWM Output

[4] CH4: Channel 4 PWM Output

[5] Antenna: Single external antenna for signal reception.

[6] LED: Status indicator light.

[7] Signal pin: Output for control signal.

[8] Power anode: Positive power input.

[9] Power cathode: Negative power input (Ground).

Note: The interface specifications for the connectors are ZH1.5mm-3P, commonly known as JST-PH2.0. Standard RC servo connectors (Futaba style) are not directly compatible and will require adapter cables or modification.

Figure 2: FS-R4M Receiver with Adapter Cables

This image illustrates the FS-R4M receiver alongside the necessary adapter cables for connecting to standard RC components. The receiver's ports are designed for ZH1.5mm-3P (JST-PH2.0) connectors.

4. Setup and Binding

4.1 Wiring Connections

Connect your servos, Electronic Speed Controller (ESC), and other components to the corresponding channels on the FS-R4M receiver. Ensure correct polarity for power connections (Power anode [8] for positive, Power cathode [9] for negative/ground, Signal pin [7] for signal).

As noted in the product overview, the receiver uses ZH1.5mm-3P (JST-PH2.0) connectors. If your servos or ESC use standard Futaba-style connectors, you will need to use appropriate adapter cables or modify the connectors. Ensure all connections are secure before proceeding.

Figure 3: Receiver Channel Ports

A detailed view of the four channel ports on the FS-R4M receiver, highlighting their compact design.

4.2 Binding Procedure

The binding process links your FS-R4M receiver to your Flysky ANT protocol transmitter. Refer to your specific transmitter's manual for detailed binding instructions, as procedures may vary slightly. A general binding sequence is as follows:

1. Ensure your transmitter is powered off.
2. Connect power to the FS-R4M receiver. The LED [6] on the receiver will typically flash, indicating it is in binding mode or awaiting a signal.
3. Place your transmitter into binding mode. This usually involves holding a specific button (e.g., "BIND" button) while powering on the transmitter. Consult your transmitter's manual for the exact steps.
4. Once the receiver and transmitter successfully bind, the LED on the receiver will change to a solid state, indicating a successful connection.
5. Release the bind button on the transmitter and power cycle both the transmitter and receiver to confirm the binding.

If binding fails, ensure the receiver is within range of the transmitter and that both devices are using the ANT protocol. Repeat the steps if necessary.

5. Operating Instructions

After successful binding, the FS-R4M receiver will output PWM signals corresponding to the commands from your transmitter. Ensure all control surfaces and functions respond correctly before operating your RC model.

- **Power On Sequence:** Always power on your transmitter first, then the receiver. When powering off, disconnect power from the receiver first, then power off the transmitter.
- **Range Check:** Perform a range check before each use, especially in new environments, to ensure reliable signal strength.
- **Interference:** Avoid operating near sources of 2.4GHz interference (e.g., Wi-Fi routers, other 2.4GHz RC systems) to prevent signal loss.

6. Maintenance

Proper care and maintenance will extend the lifespan of your FS-R4M receiver.

- **Environmental Conditions:** Operate and store the receiver within the specified temperature range of -10°C to +60°C and humidity limit of 20% to 95%. Avoid extreme temperatures and high humidity.
- **Voltage and Safety:** Always pay attention to the input voltage range (3.5-9V/DC) and ensure it is not exceeded. Incorrect voltage can damage the receiver.
- **Cleaning:** Keep the receiver clean and free from dust, dirt, and moisture. Use a soft, dry cloth for cleaning. Avoid using solvents or harsh chemicals.
- **Antenna Care:** Ensure the antenna is not cut, bent sharply, or damaged. A damaged antenna can significantly reduce range and signal reliability.
- **Firmware Updates:** The receiver supports online updates. Periodically check the official Flysky website for available firmware updates to ensure optimal performance and access to new features.

7. Troubleshooting

If you encounter issues with your FS-R4M receiver, consider the following troubleshooting steps:

- **Receiver Not Binding:**
  - Ensure both the transmitter and receiver are powered on and within close proximity during the binding process.
  - Verify that your transmitter supports the ANT protocol.
  - Check the LED status on the receiver; it should indicate binding mode (e.g., flashing).
  - Refer to your transmitter's manual for specific binding instructions.
- **No Control Response:**
  - Confirm the receiver is successfully bound to the transmitter (solid LED).
  - Check all wiring connections between the receiver, ESC, and servos for correct polarity and secure fit.
  - Ensure the power supply to the receiver is within the specified voltage range (3.5-9V/DC).
  - Verify that the transmitter is powered on and functioning correctly.
- **Short Range or Intermittent Signal:**
  - Inspect the receiver antenna for any damage, kinks, or improper routing. Ensure it is positioned away

from metal objects.
    - Avoid operating in areas with high 2.4GHz interference.
    - Ensure the transmitter's battery is adequately charged.
- **LED Indicator Issues:**
    - If the LED does not light up, check the power connection to the receiver.
    - Refer to the transmitter manual for specific LED indications during binding and operation.

8. Specifications

Feature	Specification
Product Model	FS-R4M
Adaptive Transmitters	Transmitters with ANT protocol (e.g., Flysky FS-G7P)
Adaptive Models	Mini/Micro RC Cars
Number of Channels	4
RF Frequency	2.4GHz ISM
Maximum Power	<10dBm (e.i.r.p.) (EU)
Antenna Type	Single External Antenna
Distance (Ground)	>50m
2.4G Protocol	ANT
Resolution	1024
Data Output	PWM
Input Voltage Range	3.5-9V/DC
Online Update	Yes
Temperature Range	-10°C to +60°C
Humidity Limit	20% to 95%
Dimensions (L*W*H)	20.0 x 13.0 x 7.2mm
Weight	3g
Certification	CE, FCC ID: 2A2UNR4M00
Interface Type	ZH1.5mm-3P (JST-PH2.0)

9. Warranty and Support

For warranty information, please refer to the terms and conditions provided by your retailer or the manufacturer at the time of purchase. Keep your proof of purchase for any warranty claims.

For technical support, firmware updates, and additional product information, please visit the official Flysky website:

www.flysky-cn.com

You may also contact your point of purchase for assistance.