Saved from manuals.plus.
Open the live page for links to other documents and user manuals.

Mould King 17004

Mould King Remote Controlled Kran 17004 User Manual

Model: 17004

1. Introduction

This manual provides essential information for the assembly, operation, and maintenance of your Mould King Remote Controlled Kran 17004 building set. Please read these instructions carefully before beginning assembly or operation to ensure safe and correct use of the product.



An illustration of the Mould King Remote Controlled Kran 17004 in its fully assembled state, showcasing its intricate design and scale.

2. Safety Information

WARNING! Not suitable for children under 36 months. Choking hazard due to small parts that can be swallowed.

- Always supervise children during play.
- Keep small parts away from infants and young children.
- Do not modify the product in any way not described in this manual.
- Ensure all connections are secure before operation.

3. What's in the Box

Your Mould King Remote Controlled Kran 17004 package should contain the following:

- Building Bricks (approx. 1700 pieces)
- Remote Control Unit
- Power Pack/Battery Unit
- USB Charging Cable
- Instruction Manual (this document)



The product packaging for the Mould King Kran 17004 is displayed next to the completed crane model, giving an idea of the product's presentation and the final assembled toy.

4. Setup

4.1 Assembly

Follow the detailed step-by-step assembly instructions provided in the separate building guide included with your set. Ensure all connections are firm and parts are correctly oriented.

4.2 Battery Installation and Charging

1. Locate the battery compartment on the main power unit.
2. Insert the required batteries (if not pre-installed) according to the polarity markings.
3. Connect the provided USB charging cable to the power unit's charging port.
4. Plug the other end of the USB cable into a standard USB power adapter (not included) or a computer USB port.
5. Allow the unit to charge fully before first use. Refer to the charging indicator light for status.

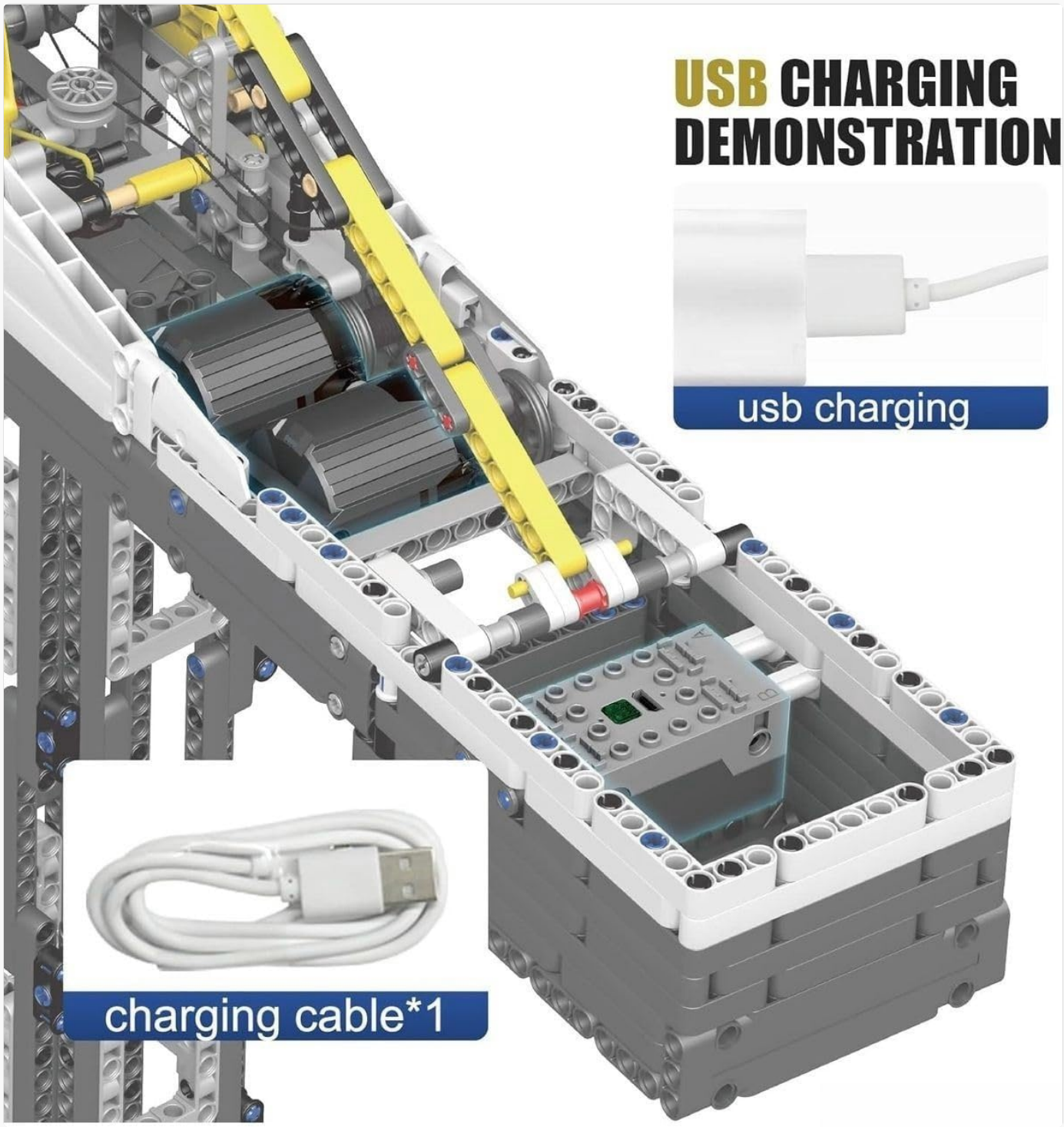

A visual guide demonstrating the USB charging process for the crane's power unit. It shows the included charging cable connected to the unit, indicating how to recharge the battery.

4.3 Remote Control Pairing

Once the crane's power unit is charged and turned on, activate the remote control. The remote control should automatically pair with the crane. If pairing fails, refer to the specific remote control instructions for manual pairing procedures.

5. Operating Instructions

The Mould King Remote Controlled Kran 17004 offers various functions for realistic crane operation.

5.1 Basic Controls

- **Rotation:** Use the designated controls on the remote to rotate the crane's upper structure 360 degrees.
- **Boom Movement:** Control the raising and lowering of the main boom.
- **Hook Operation:** Operate the two-way hook to lift and lower objects.
- **Sliding Boom:** Extend and retract the suspended sliding boom for precise positioning.



The image highlights the crane's rotatable sweep capability, showing how the upper structure can rotate to cover a wide operational area, indicated by red directional arrows.

5.2 Key Features

- **Suspended Sliding Boom:** Allows for adjustable reach and precise load placement.
- **Strong Power Pack:** Provides reliable power for all motorized functions.
- **Powerful Two-Way Hook:** Designed for efficient lifting and lowering of various loads.
- **Secure Base:** Ensures stability during operation.



This image details the main operational features of the crane, including its suspended sliding boom, robust power pack, and versatile two-way hook. It also illustrates the secure base design and the remote control options, including a physical remote and a smartphone application.

6. Maintenance

6.1 Cleaning

To clean the model, gently wipe with a dry, soft cloth. Do not use water or chemical cleaners, as this may damage electronic components or the plastic bricks.

6.2 Storage

Store the assembled crane or its components in a cool, dry place away from direct sunlight and extreme temperatures. Disconnect batteries if storing for extended periods.

6.3 Battery Care

- Always use the provided USB charging cable.
- Do not overcharge the battery unit.
- If the product will not be used for a long time, remove the batteries from the remote control and the main power unit.
- Dispose of batteries responsibly according to local regulations.

7. Troubleshooting

- **Crane not responding:**
  - Check if the power unit is turned on and fully charged.
  - Ensure the remote control has fresh batteries and is paired correctly.
  - Verify there are no obstructions to the remote control's signal.
- **Motor functions are weak:**
  - The battery unit may need recharging.
  - Ensure all gears and moving parts are free from debris.
- **Parts are loose after assembly:**
  - Carefully re-examine the assembly steps in the building guide to ensure all bricks are securely connected.

8. Specifications

Feature	Detail
Brand	Mould King
Model Number	17004
Material	Plastic
Color	White
Number of Pieces	1700
Item Dimensions (L x W x H)	98.4 x 92.2 x 29.3 cm (38.7 x 36.29 x 11.53 inches)
Recommended Age	3 years and up (Manufacturer's minimum age: 36 months)
Educational Objective	Engineering skill, Problem-solving skill, Spatial reasoning
Special Feature	Battery operated
Number of Players	1 to 3

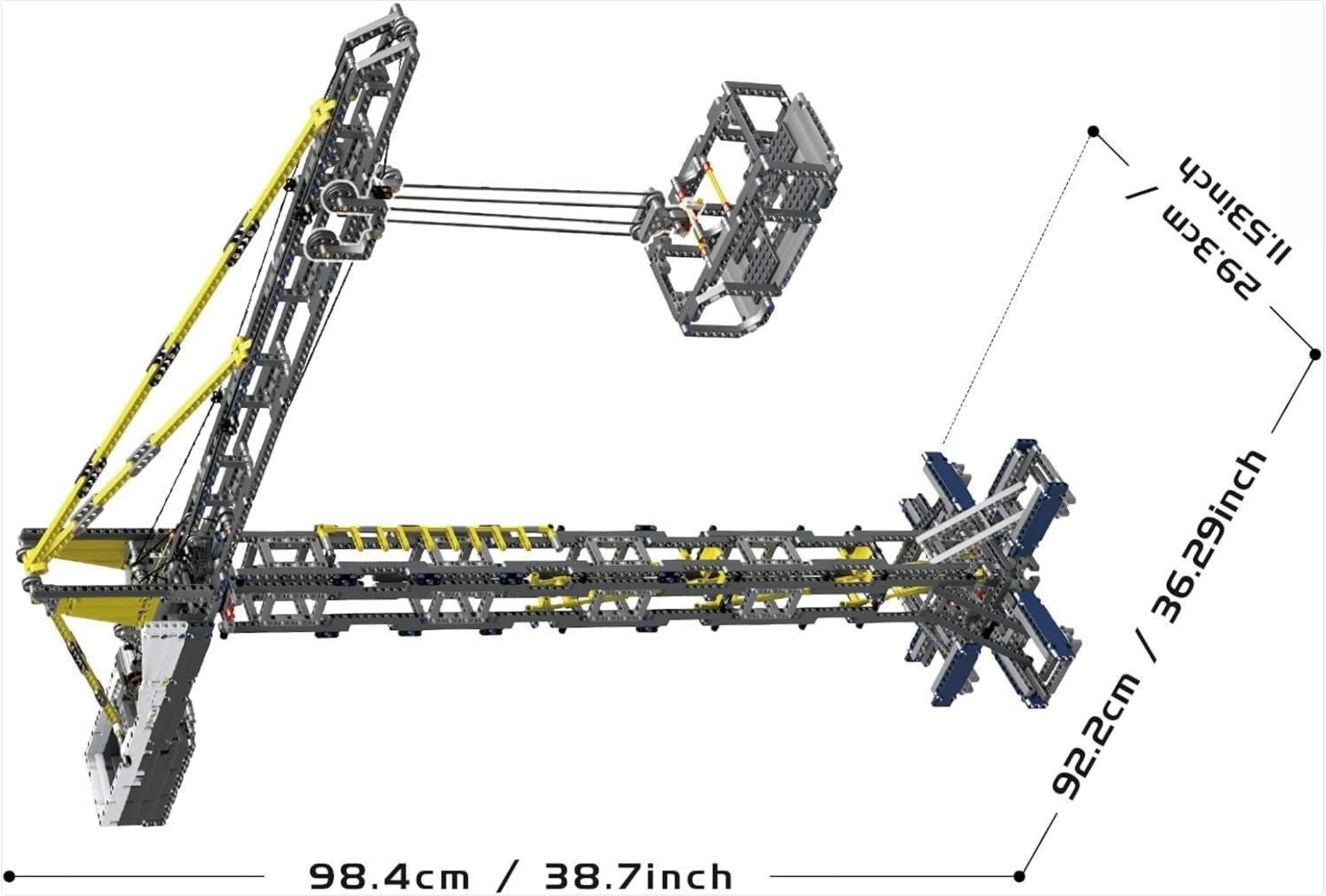
11.53inch / 29.3cm
92.2cm / 36.29inch
98.4cm / 38.7inch

This diagram provides the precise dimensions of the assembled crane: 98.4 cm (38.7 inches) in height, 92.2 cm (36.29 inches) in length, and 29.3 cm (11.53 inches) in width.

9. Warranty and Support

For warranty information and customer support, please refer to the contact details provided on the product packaging or visit the official Mould King website. Keep your proof of purchase for any warranty claims.
If you encounter any issues not covered in this manual, please contact Mould King customer service for assistance.

© 2023 Mould King. All rights reserved.

Ask a question about this manual

Ask about setup, troubleshooting, compatibility, parts, safety, or missing instructions. Manuals+ will review the question and use this page's manual context to help answer it.

Name

Anonymous

Email

you@example.com

After a successful submission, we securely hash the supplied account or form email before sending it to Microsoft Advertising for conversion attribution. Privacy details.

Question

Example: How do I reset this device or fix this error?

Details

Model number, symptoms, what you tried, or the section of the manual you are using.

Submit question

Open the live page

https://manuals.plus/asin/B0CKTYMBQN

More documents and user manuals: **https://manuals.plus/**