Saved from manuals.plus.
Open the live page for links to other documents and user manuals.

Weehom MANTIZ-TW-WH

Weehom Twin Metal Platform Bed Frame User Manual

Model: MANTIZ-TW-WH

Introduction

Thank you for choosing the Weehom Twin Metal Platform Bed Frame. This manual provides essential information for the safe assembly, operation, and maintenance of your new bed frame. Please read all instructions carefully before beginning assembly and retain this manual for future reference.



Image: The Weehom Twin Metal Platform Bed Frame, showcasing its elegant headboard and footboard design in white.

Safety Information

- Always assemble the bed frame on a soft, clean surface to prevent scratches.
- Ensure all bolts and screws are securely tightened before use. Periodically check and re-tighten as needed.
- Do not exceed the maximum weight capacity of 330 lbs.
- Keep small parts away from children during assembly to prevent choking hazards.
- Do not stand or jump on the bed frame.

Package Contents

Verify that all components are present before beginning assembly. If any parts are missing or damaged, please contact customer support.

The package includes all necessary tools and accessories for assembly.

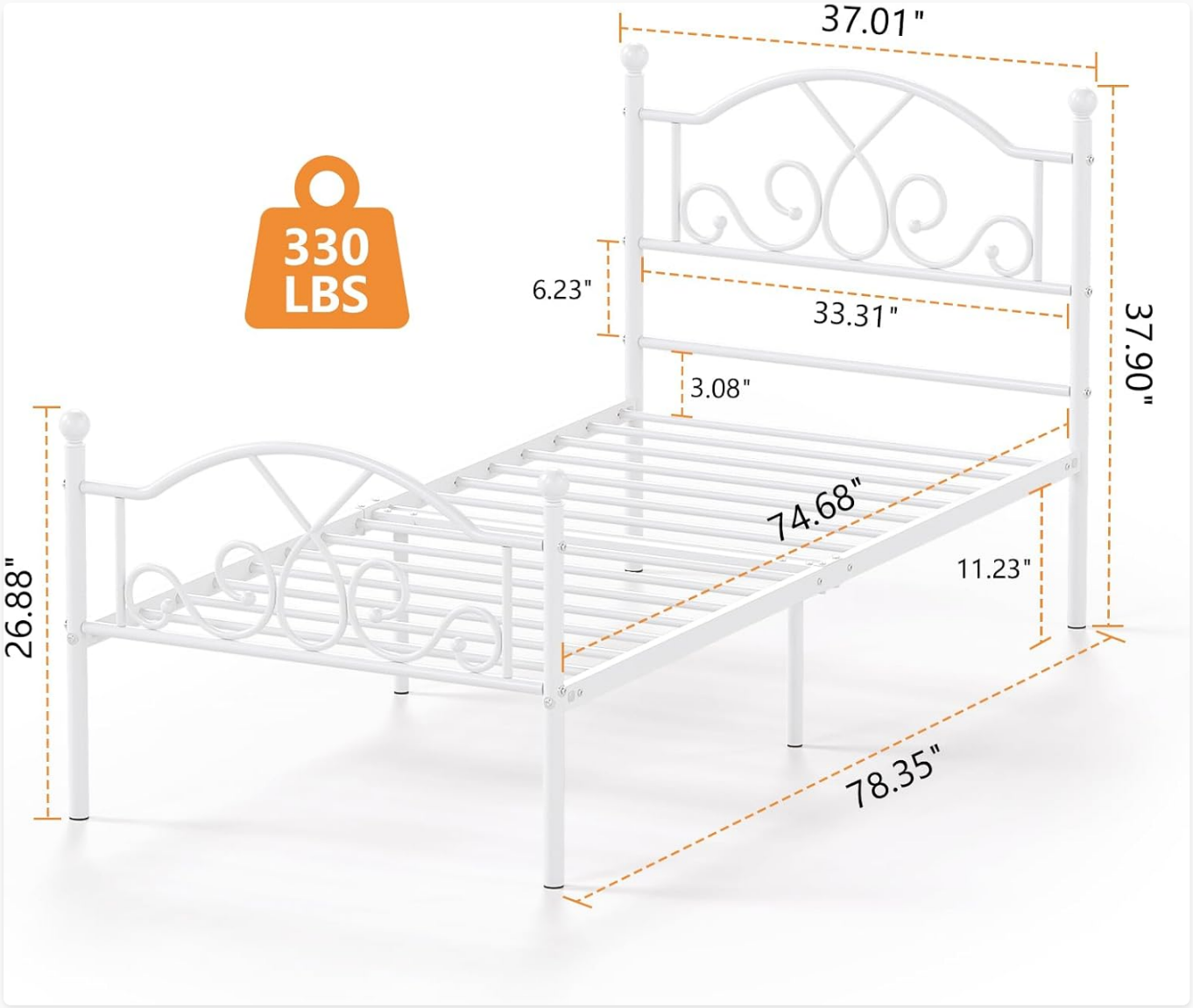

Image: Detailed diagram illustrating the dimensions of the bed frame and its 330 lbs weight capacity.

Setup and Assembly

Assembly is designed to be straightforward and typically takes approximately 35 minutes. Follow these general steps:

1. **Unpack Components:** Carefully remove all parts from the packaging and lay them out on a soft, flat surface.
2. **Assemble Headboard and Footboard:** Attach the decorative elements and support bars to the main headboard and footboard posts using the provided hardware.
3. **Connect Side Rails:** Securely attach the side rails to the assembled headboard and footboard.
4. **Install Slats:** Insert the metal slats into the designated slots on the side rails. Ensure each slat is properly seated and secured.
5. **Tighten All Fasteners:** Once all parts are in place, go back and ensure all bolts and screws are fully tightened. Do not overtighten.
6. **Attach Anti-slip Footpads:** Ensure the anti-slip and scratch-resistant footpads are correctly installed on each leg to protect your floors and enhance stability.



Image: Illustration of the unique easy assembly design for installing the bed slats.



Image: Details highlighting the strong, sturdy construction and the anti-slip, scratch-resistant footpads.

Operating Instructions

This bed frame is designed for use with a twin-size mattress. No box spring is required, as the metal slats provide

ample support.

- Place your twin mattress directly onto the assembled metal slats.
- Utilize the 11.23 inches of under-bed clearance for storage of items such as clothes, blankets, books, or toys.



Image: The bed frame demonstrating the 11.23 inches of under-bed storage space.

Your browser does not support the video tag.

Video: An overview of the Weehom Twin Bed Frame, highlighting its features and design.

Maintenance

- **Cleaning:** Wipe the metal frame with a soft, damp cloth. Avoid harsh chemicals or abrasive cleaners that could damage the painted finish.
- **Regular Checks:** Periodically inspect all bolts and connections to ensure they remain tight. Re-tighten as necessary to maintain stability and prevent squeaking.

- **Floor Protection:** The integrated anti-slip and scratch-resistant footpads help protect your floors. Ensure they are always in place.

Troubleshooting

Problem	Possible Cause	Solution
Bed frame wobbles or is unstable.	Loose bolts or uneven assembly.	Ensure all bolts are securely tightened. Check that the frame is on a level surface.
Squeaking noises.	Loose connections or friction between metal parts.	Re-tighten all bolts. Apply a small amount of lubricant (e.g., silicone spray) to connection points if necessary.
Missing parts during assembly.	Packaging error or lost during unpacking.	Carefully check all packaging materials. Contact Weehom customer support for replacement parts.

Specifications

Brand: Weehom

Model Number: MANTIZ-TW-WH

Size: Twin

Color: White

Material: Metal

Product Dimensions (Overall): 78.35"L x 37.01"W x 37.9"H

Under-bed Storage Height: 11.23 inches

Weight Bearing Capacity: 330 lbs

Finish Type: Painted

Assembly Required: Yes (Approx. 35 mins)

Box Spring Required: No

Warranty and Support

For any questions, concerns, or to report missing/damaged parts, please contact Weehom customer support. Refer to your purchase documentation for specific warranty details.

Contact: Please visit the Weehom Store on Amazon or contact the seller Winsmooth directly through your Amazon order history.

© 2026 Weehom. All rights reserved.

Ask a question about this manual

Ask about setup, troubleshooting, compatibility, parts, safety, or missing instructions. Manuals+ will review the question and use this page's manual context to help answer it.

Name

Anonymous

Email

you@example.com

After a successful submission, we securely hash the supplied account or form email before sending it to Microsoft Advertising for conversion attribution. Privacy details.

Question

Example: How do I reset this device or fix this error?

Details

Model number, symptoms, what you tried, or the section of the manual you are using.

Submit question

Open the live page

https://manuals.plus/asin/B0CDFYW9QH

More documents and user manuals: **https://manuals.plus/**