Z-Lite 823-4V-BN

Z-Lite Lyna Vanity Light User Manual

Model: 823-4V-BN

Product Overview

The Z-Lite Lyna Vanity Light, model 823-4V-BN, is a 4-light fixture designed for bathroom vanity applications. It features a brushed nickel finish and clear glass shades, providing a transitional aesthetic. This fixture is dimmable and uses E26 medium base incandescent bulbs, with a maximum wattage of 100 watts per bulb.



Figure 1: Front view of the Z-Lite Lyna 4-Light Vanity Light (Model 823-4V-BN).

Important Safety Instructions

Please read and understand all instructions before beginning installation. Failure to do so may result in electric shock, fire, or other injuries that could be fatal or cause serious damage to property.

- **WARNING:** To avoid electric shock, disconnect power at the main circuit breaker or fuse box before installation or servicing.
- All electrical connections must be in accordance with local codes, ordinances, or the National Electric Code (NEC). Consult a qualified electrician if you are unfamiliar with proper electrical wiring connections.
- Do not install this fixture in wet locations. It is designed for indoor, damp locations (e.g., bathrooms with proper ventilation).

- Handle glass components with care. Wear gloves to prevent cuts or abrasions.
- Ensure the fixture is securely mounted to a structural element of the building.
- Use only bulbs of the specified type and wattage (E26 Medium, max 100W per bulb). Exceeding the maximum wattage may cause overheating and fire.

Package Contents

Carefully unpack your fixture and check that all parts are included. Retain the packaging materials until installation is complete to prevent loss of small parts.

- Fixture Body (1)
- Glass Shades (4)
- Mounting Hardware Kit (includes mounting strap, outlet box screws, wire nuts, ground screw) (1 set)
- Instruction Manual (1)

Note: Bulbs are not included and must be purchased separately.

Setup and Installation

Professional installation is recommended. If installing yourself, ensure you have the necessary tools (screwdriver, wire strippers, electrical tape, safety glasses) and follow all safety precautions.

1. **Turn Off Power:** Locate the circuit breaker that supplies power to the light fixture outlet box. Turn off the power at the circuit breaker or fuse box. Verify the power is off using a voltage tester.
2. **Prepare Mounting:** Attach the mounting strap to the outlet box using the provided outlet box screws. Ensure the mounting strap is securely fastened.
3. **Electrical Connections:**
    - Connect the bare copper ground wire from the fixture to the green or bare copper ground wire from the outlet box using a wire nut. If no ground wire is present, attach to the ground screw on the mounting strap.
    - Connect the white (neutral) wire from the fixture to the white (neutral) wire from the outlet box using a wire nut.
    - Connect the black (hot) wire from the fixture to the black (hot) wire from the outlet box using a wire nut.
    - Ensure all wire connections are secure and covered with wire nuts. Wrap electrical tape around wire nuts for added security.
4. **Mount Fixture:** Carefully tuck all wires into the outlet box. Align the fixture body with the mounting strap and secure it with the provided mounting screws.
5. **Install Glass Shades:** Gently attach each glass shade to its respective socket holder on the fixture. Ensure they are securely fastened but do not overtighten.
6. **Install Bulbs:** Screw in the appropriate E26 medium base incandescent bulbs (max 100W per bulb) into each socket.
7. **Restore Power:** Turn the power back on at the circuit breaker. Test the fixture.



Figure 2: Example installation of the Lyna Vanity Light in a bathroom setting.

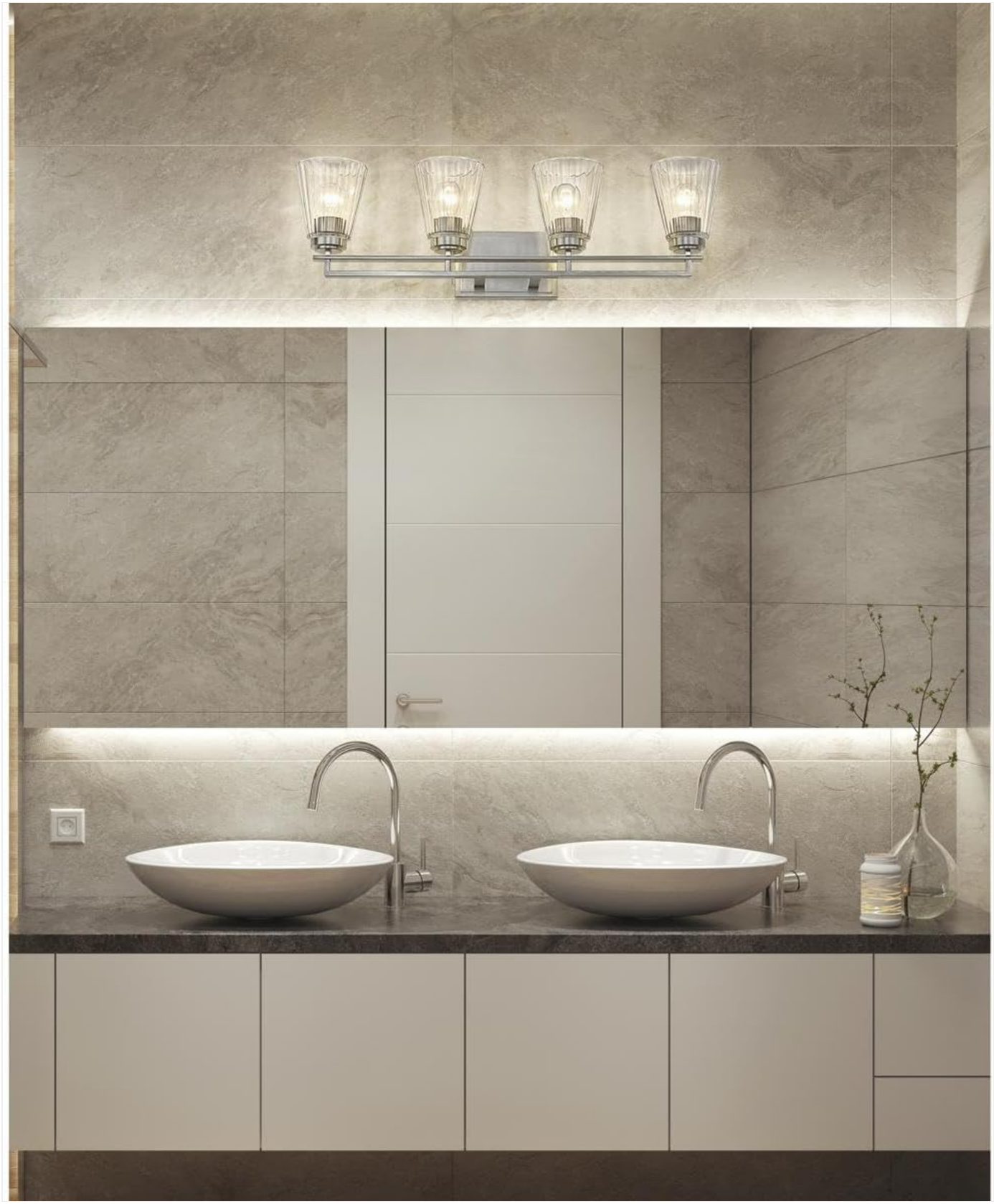

Figure 3: The Lyna Vanity Light complementing a modern double vanity setup.

Operating Instructions

The Z-Lite Lyna Vanity Light operates like a standard light fixture. Once installed and powered, it can be controlled by a wall switch. If connected to a compatible dimmer switch, the light output can be adjusted.

- **Turning On/Off:** Use the wall switch connected to the fixture to turn the light on or off.
- **Dimming (Optional):** If a compatible dimmer switch is installed, rotate or slide the dimmer control to adjust the

brightness level. Ensure that the bulbs used are also dimmable.

Maintenance

Regular maintenance will help preserve the appearance and functionality of your Z-Lite Lyna Vanity Light.

- **Cleaning:** Turn off power before cleaning. Wipe the fixture with a soft, dry cloth. Do not use abrasive cleaners, solvents, or polishes as they may damage the finish. For glass shades, a mild glass cleaner can be used, applied to a cloth first, not directly to the glass.
- **Bulb Replacement:** Turn off power before replacing bulbs. Allow bulbs to cool completely before touching. Unscrew old bulbs and screw in new E26 medium base incandescent bulbs (max 100W).
- **Inspection:** Periodically check all connections and mounting hardware for tightness.

Troubleshooting

If you encounter issues with your fixture, refer to the following common problems and solutions:

Problem	Possible Cause	Solution
Light does not turn on.	No power to fixture; Loose wiring; Faulty bulb; Faulty switch.	Check circuit breaker/fuse. Ensure all wire connections are secure. Replace bulb. Test switch or consult electrician.
Light flickers.	Loose bulb; Incompatible dimmer; Loose wiring.	Tighten bulb. Ensure dimmer is compatible with incandescent bulbs. Check wire connections.
Bulbs burn out quickly.	Incorrect wattage bulb; Voltage fluctuations.	Ensure bulbs do not exceed 100W. Consult electrician for voltage issues.

Specifications

Attribute	Detail
Brand	Z-Lite
Model Number	823-4V-BN
Finish	Brushed Nickel
Shade Material	Clear Glass
Number of Lights	4
Bulb Type	Incandescent (E26 Medium Base)
Max Wattage per Bulb	100 Watts
Total Wattage	400 Watts
Voltage	120 Volts
Dimensions (L x W x H)	30.5 x 6.5 x 9 inches
Item Weight	10 Pounds

Attribute	Detail
Installation Type	Semi Flush Mount (Wall Mount)
Special Feature	Dimmable
Indoor/Outdoor Usage	Indoor

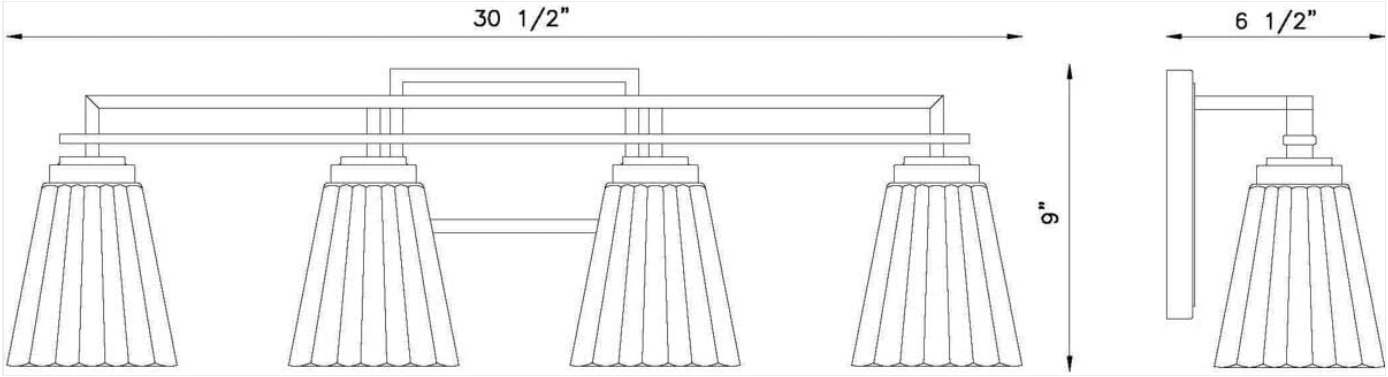

Figure 4: Dimensional drawing of the Lyna Vanity Light.

Warranty and Support

This Z-Lite product comes with a manufacturer's warranty. For specific warranty details, please refer to the documentation included with your purchase or visit the official Z-Lite website.
For technical support, replacement parts, or any inquiries regarding your Z-Lite Lyna Vanity Light, please contact Z-Lite customer service. Contact information can typically be found on the manufacturer's website or on the product packaging. You may also visit the product page on Amazon for additional information and customer reviews.

© 2023 Z-Lite. All rights reserved.
Z-Lite is a registered trademark.