Manuals+
Q & A | Deep Search | Upload

Bxmgr 3316348.900

RV Refrigerator Control Board Instruction Manual

Model: 3316348.900
Brand: Bxmgr

1. Introduction

This manual provides essential information for the installation, operation, and maintenance of the Bxmgr 3316348.900 RV Fridge Control Board. This board is designed as a replacement lower control board for various Dometic gas absorption refrigerators, controlling propane ignition and operation, as well as power to AC components.
Please read this manual thoroughly before installation and use to ensure proper function and safety.

2. Safety Information

WARNING: Disconnect all power sources (AC and DC) to the refrigerator before attempting any installation, maintenance, or troubleshooting. Failure to do so may result in electric shock, fire, or serious injury.

- Always ensure proper ventilation when working with RV appliances.
- If you are unsure about any step, consult a qualified technician.
- Verify compatibility before installation. Incorrect board installation can damage the refrigerator.
- Handle the circuit board with care to avoid static discharge damage.

3. Product Overview

The Bxmgr 3316348.900 RV Fridge Control Board is a power module circuit board with an integrated propane function igniter. It serves as the main circuit board for gas absorption refrigerators.

Figure 3.1: Bxmgr 3316348.900 RV Fridge Control Board with protective cover.

3.1 Key Features

- Built-in Ignitor for propane operation.
- Supports 2-way or 3-way operation (depending on refrigerator model).
- Fuse protected for safety.
- Variable temperature adjustment for fixed-temp refrigerators.

3.2 Power Supplies

The board operates with the following power supplies:

- 120V, 3.5A, 60Hz (AC)
- 12VDC, 1.9A (DC)

4. Compatibility and Replacement

This control board is compatible with a wide range of Dometic refrigerator models. However, it is crucial to verify the number of interfaces on the bottom of your existing control board before purchasing and installation.

Figure 4.1: Compatible Dometic refrigerator models.

4.1 Compatible Models

The 3316348.900 RV Refrigerator Circuit/Control Board is compatible with the following Dometic models:

DM2652	RM2652	DM2662
DM2672	DM2682	DM2663
DM2852	DM2862	DM2872
DM2882	DM2852lbx	DM2862rbx
RM1350	RM2807	RM2351
RM2354	RM2451	RM2454
RM2551	RM2554	RM2620

RM2662	RM2820	RM2852
RM2862	NDM1062	NDR1062

Important Note:
Some older control boards with 8 interfaces on the bottom cannot be replaced by this board. This board has 7 connection ports at the bottom. Additionally, dinosaur circuit boards and boards with part numbers starting with "293" for the Micro p-711 are not compatible.

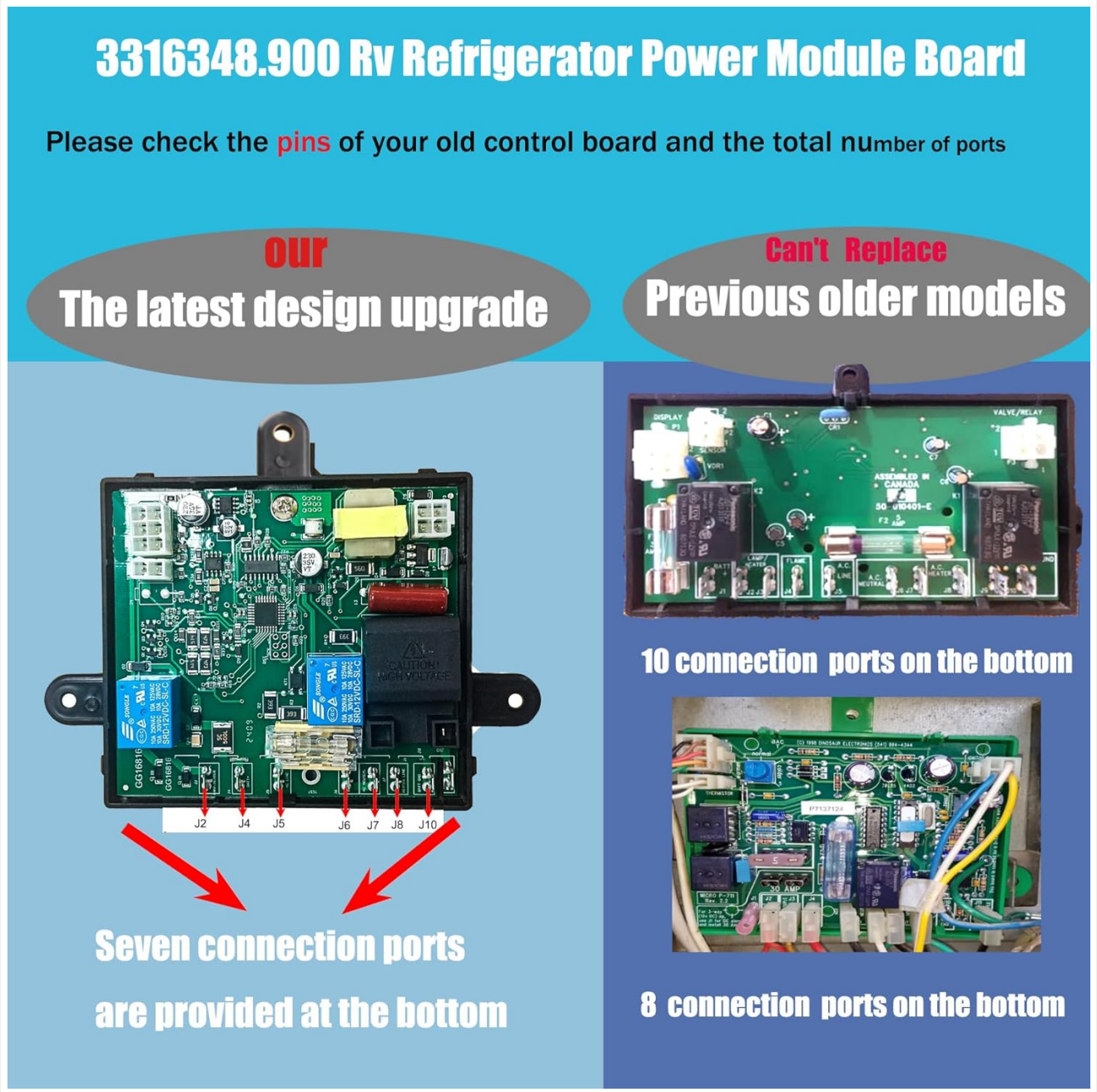

Figure 4.2: Visual comparison of the 7-port board (left) with older 8-port and 10-port boards (right). Ensure your old board has 7 bottom ports for compatibility.

4.2 Replacement Part Numbers

This 3316348.900 RV Fridge Circuit board replaces the following previous board models:

- 3316348900
- 3316348.000
- 0713814221829

- 3850712013
- 4450007138
- 4450020612
- 4450018066
- 82-EC385071201
- SP-219A

5. Installation Guide

Before beginning installation, ensure you have read and understood the safety information in Section 2. It is highly recommended to take photos of your existing board and its connections before removal to aid in reassembly.

5.1 Component Identification

Familiarize yourself with the connection points on the new control board:

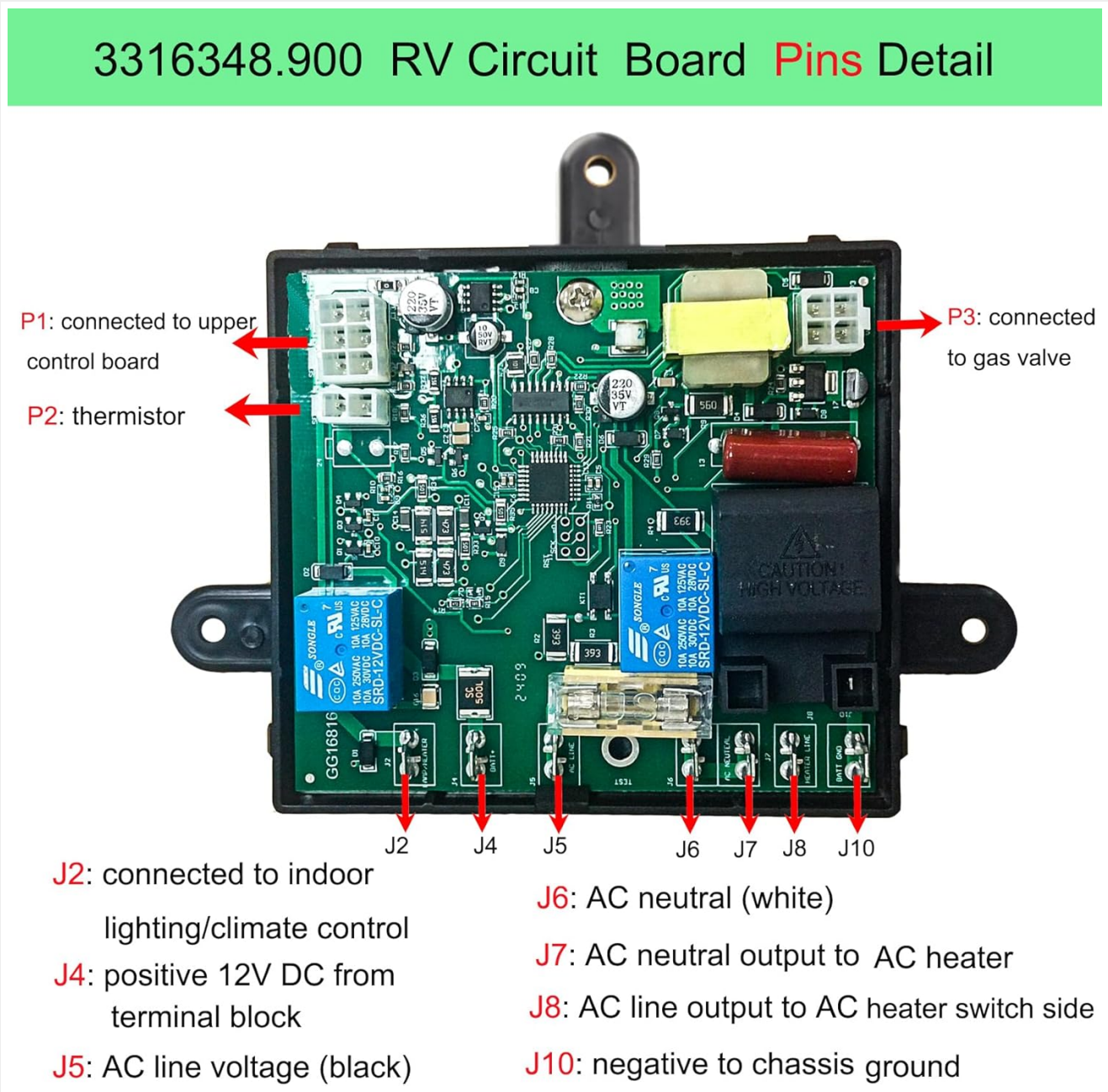

Figure 5.1: Pin details and functions on the 3316348.900 RV Fridge Control Board.

- **P1:** Connected to the upper control board.
- **P2:** Thermistor connection.
- **P3:** Connected to the gas valve.
- **J2:** Connected to indoor lighting/climate control.
- **J4:** Positive 12V DC from terminal block.
- **J5:** AC line voltage (black wire).
- **J6:** AC neutral (white wire).
- **J7:** AC neutral output to AC heater.
- **J8:** AC line output to AC heater switch side.
- **J10:** Negative to chassis ground.

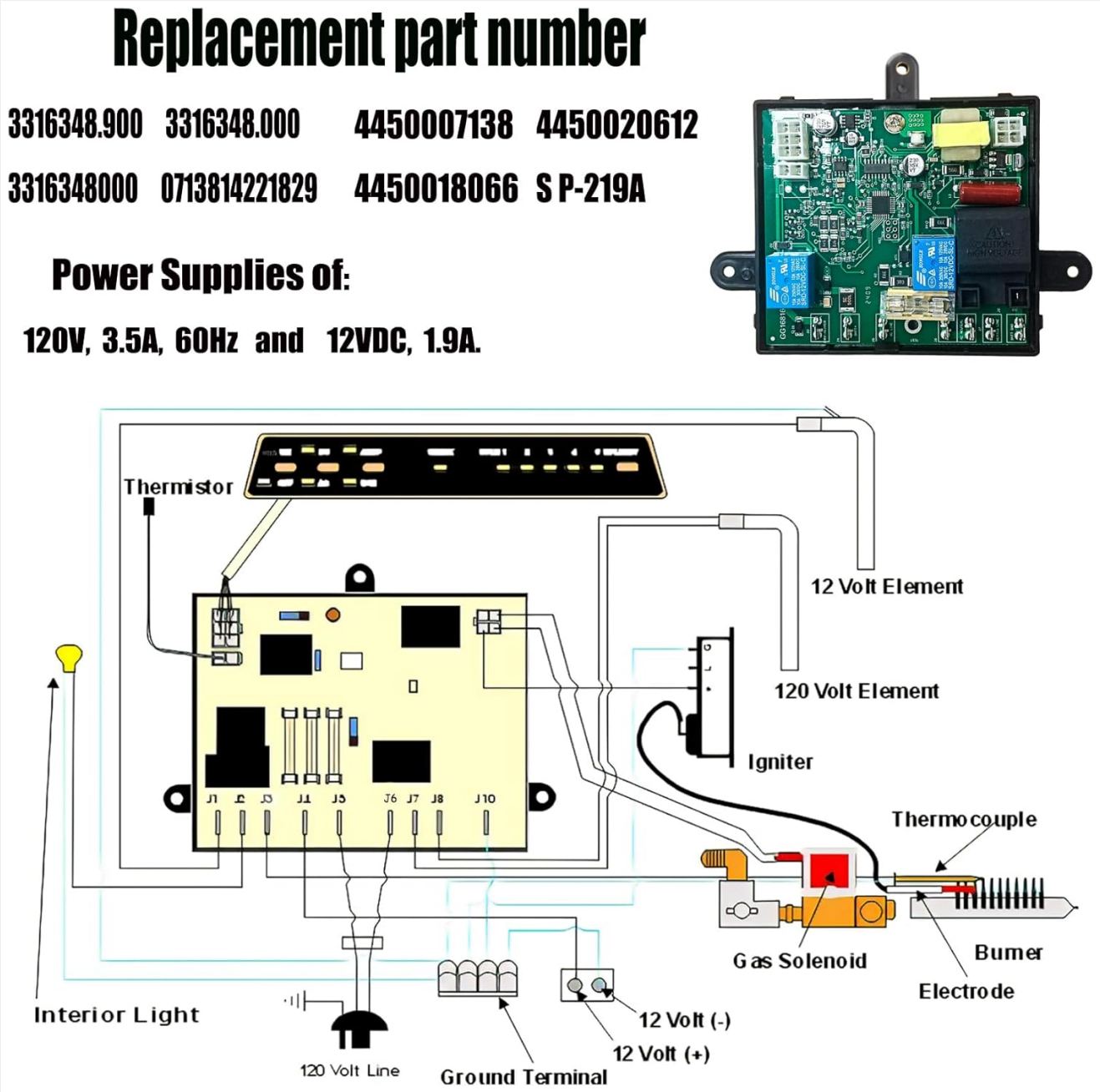

Figure 5.2: General wiring diagram illustrating connections to the control board.

5.2 Installation Steps

1. **Disconnect Power:** Turn off the RV's main power supply and disconnect the refrigerator's AC and DC power.
2. **Access Old Board:** Locate the existing control board, typically found in the exterior access panel at the rear of

the RV refrigerator.

3. **Document Connections:** Before disconnecting any wires, take clear photos of all connections to the old board. Label wires if necessary.
4. **Remove Old Board:** Carefully disconnect all wires and mounting screws holding the old board in place.
5. **Install New Board:** Mount the new Bxmgr 3316348.900 board in the same location.
6. **Connect Wires:** Reconnect all wires to the corresponding terminals on the new board, referring to your photos and the pin identification (Figure 5.1). Ensure all connections are secure.
7. **Secure Cover:** Replace the protective cover over the board.
8. **Restore Power:** Reconnect the refrigerator's AC and DC power, then restore the RV's main power.

Figure 5.3: Example of the control board installed within an RV refrigerator compartment.

For a visual guide on the product, please refer to the video below:

Your browser does not support the video tag.

Video 5.1: Overview of the 3316348.900 RV Fridge Circuit Board, showing its components and protective cover.

6. Operation

Once installed, the control board manages the core functions of your RV refrigerator. It controls the ignition and operation of the propane system and supplies power to the AC heating elements.

- **Propane Operation:** The integrated igniter will attempt to light the propane burner. If ignition fails, the CHECK light on your refrigerator's control panel will illuminate. The board will typically repeat the ignition cycle (e.g., 3 attempts at 30-minute intervals) if no flame is sensed.
- **AC Operation:** The board directs AC power to the heating elements when operating on shore power or generator.
- **DC Operation (3-way models):** In 3-way models, if the DC voltage level falls too low for more than 10 seconds, the DC element will drop out, and the DC mode light will flash.

7. Maintenance

The control board itself requires minimal maintenance. However, regular checks of the refrigerator system are recommended:

- **Visual Inspection:** Periodically inspect the board and its connections for any signs of corrosion, loose wires, or damage.
- **Cleanliness:** Keep the area around the control board clean and free of dust or debris.
- **Fuse Check:** If the refrigerator experiences power issues, check the fuses on the board (if accessible and safe to do so after disconnecting power).

8. Troubleshooting

This section addresses common issues that may indicate a problem with the control board or related components.

Problem	Possible Cause	Solution
Refrigerator light/AC power supply does not work.	Faulty AC power connection, blown fuse, or control board issue.	• Verify AC power supply to the RV and refrigerator. • Check fuses on the control board (after disconnecting power). • Inspect wiring connections to J5, J6, J7, J8.
Propane ignition function is abnormal (e.g., no ignition, CHECK light on).	Gas supply issue, faulty igniter, dirty burner, or control board issue.	• Ensure propane tank is open and has gas. • Check for proper connection to P3 (gas valve). • Clean the burner assembly and igniter electrode. • Verify the igniter is sparking.
DC mode light flashes (3-way models).	Low 12V DC voltage.	• Check RV battery voltage. • Inspect 12V DC wiring and connections to J4 and J10.

If problems persist after attempting these solutions, it may indicate a more complex issue requiring professional diagnosis.

9. Specifications

Attribute	Detail
Model Number	3316348.900
Manufacturer Part Number	3316348.900
Power Supply (AC)	120V, 3.5A, 60Hz
Power Supply (DC)	12VDC, 1.9A
Item Weight	10.8 ounces
Package Dimensions	7.17 x 6.06 x 3.35 inches
Country of Origin	China

Figure 9.1: Summary of key features and service information.

10. Warranty and Support

Bxmgr offers comprehensive after-sales support for this product.

- **Warranty:** This product comes with a three-year after-sales service period.
- **Returns:** A 180-day return policy is offered without requiring a specific reason.
- **Contact:** For any questions or issues, please email the seller. Responses are typically provided within 24 hours to assist with problem resolution.

© 2025 Bxmgr. All rights reserved.