Saved from manuals.plus.
Open the live page for links to other documents and user manuals.

KENCIT T33

KENCIT T33 Automatic On-Demand Diaphragm Pump User Manual

Model: T33 | Brand: KENCIT

Introduction

This user manual provides detailed instructions for the safe and efficient operation of your KENCIT T33 Automatic On-Demand Diaphragm Pump. Designed for various applications including kitchen, bathroom, RV, marine, yacht, caravan, and garden use, this pump offers reliable water pressure with its automatic on-demand functionality. Please read this manual thoroughly before installation and operation to ensure optimal performance and longevity of your pump.

Safety Information

- Always disconnect power before performing any maintenance or installation.
- Do not pump gasoline, petrol, or fluids with a flash point below 37°C (98°F) to avoid explosion or death.
- Ensure proper ventilation during operation.
- Protect the pump from freezing temperatures.
- Use appropriate wiring and fusing as per local electrical codes.
- This pump is designed for 12Vdc power supply. Do not connect to other voltages.

Package Contents

Verify that all items listed below are included in your package. If any items are missing or damaged, please contact KENCIT customer support.



Image: KENCIT T33 Automatic On-Demand Diaphragm Pump with all included accessories, such as hose barb adapters, MNPT adapters, hose clamps, and PTFE tape.

- KENCIT T33 Diaphragm Pump (1 unit)
- 1/2" MNPT Adapters (Quantity as supplied)
- 1/2" Hose Barb Adapters (Quantity as supplied)
- 1/2" Hose Barb Elbow Adapters (Quantity as supplied)
- 50 Mesh Inlet Strainer (1 unit)
- Hose Clamps (Quantity as supplied)
- PTFE Tape (1 roll)

Product Features

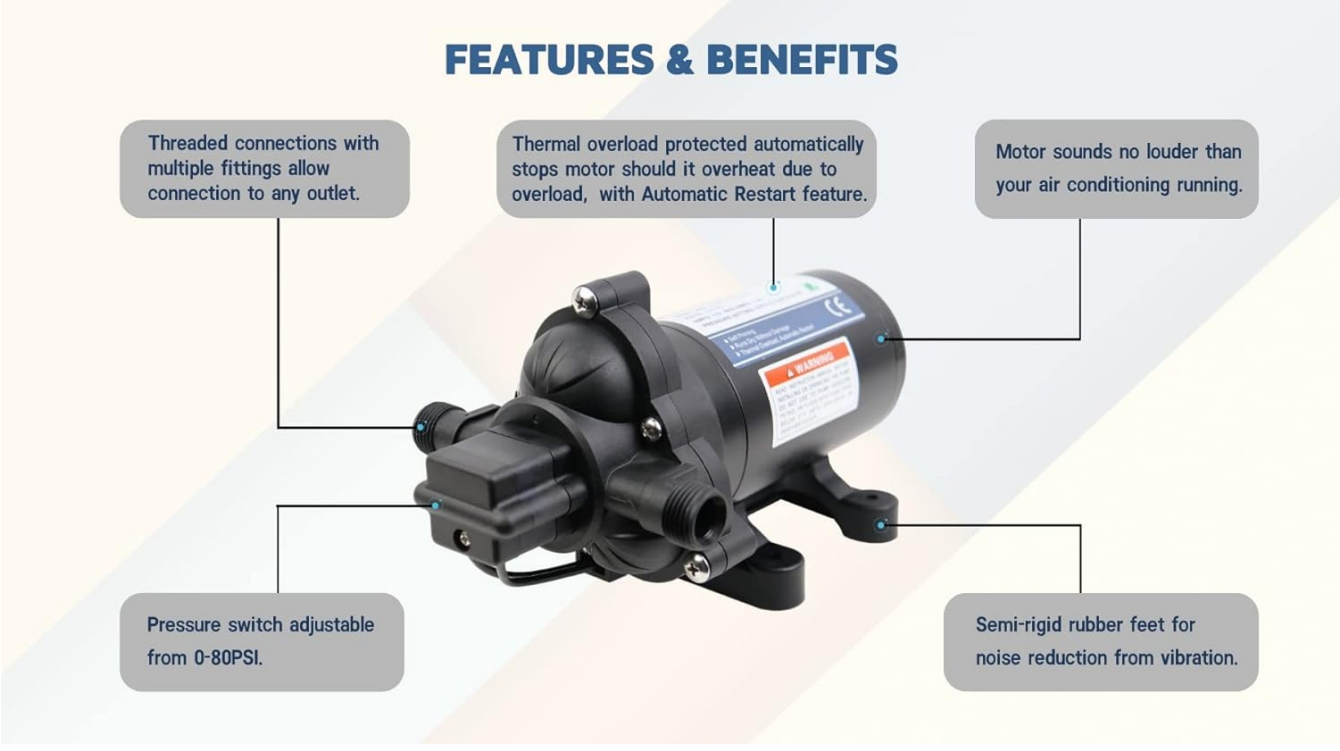

Image: Diagram highlighting key features of the KENCIT T33 pump, including threaded connections, thermal overload protection, quiet motor, adjustable pressure switch, and semi-rigid rubber feet.

- **Automatic On-Demand Operation:** Built-in pressure switch automatically starts and stops the pump instantaneously when the discharge valve opens and closes.
- **Dry Run Capability:** Can run dry for extended periods without damage.
- **High Temperature Tolerance:** Capable of handling liquids up to 140°F (60°C).
- **Extended Pump Life:** Ball bearing drive throughout the pump and motor ensures longer operational life.
- **Thermal Protection:** Motor is thermally protected with an automatic control switch for internal pressure.
- **Excellent Self-Priming:** Self-primes up to 9.8 feet suction lift.
- **Efficient Motor:** Powerful, permanent magnet motor with low current draw and long-life brushes.
- **Versatile Application:** Ideal for garden, RV, yacht, agricultural irrigation spraying, kitchen, food trucks, and fish tanks.

Specifications

Attribute	Value
Brand	KENCIT
Model	T33
Voltage	12Vdc
Maximum Flow Rate	4.0 GPM (Gallons Per Minute)
Maximum Pressure	45 PSI
Product Dimensions	8.4"L x 5.2"W x 4.9"H (213mm L x 132mm W x 124mm H)
Item Weight	4.9 Pounds

Material	Metal
Power Source	DC Power Supply
Special Features	Pressure switch

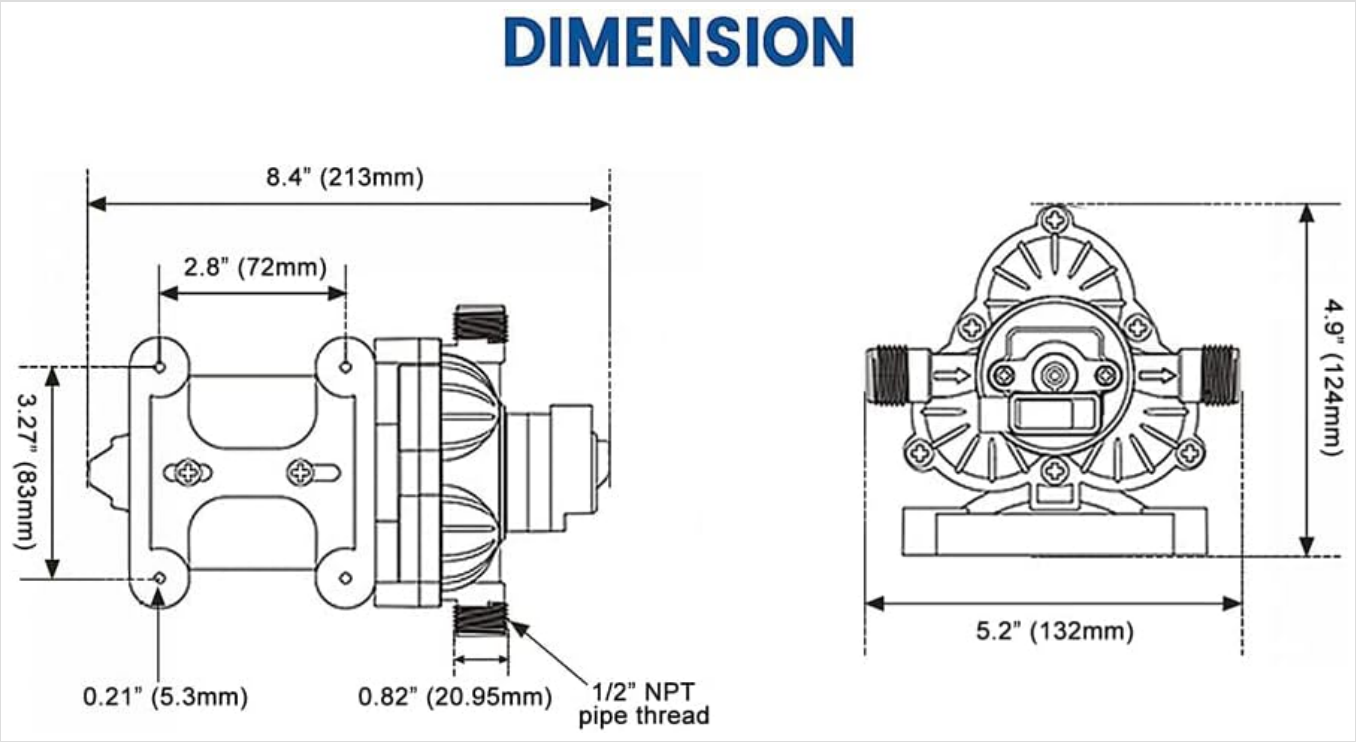

Image: Detailed dimensional drawing of the KENCIT T33 pump, showing length, width, and height measurements.

Setup

Proper setup is crucial for the performance and longevity of your KENCIT T33 pump. Follow these steps carefully:

1. **Mounting:** Securely mount the pump in a dry, well-ventilated area. Use the mounting feet to attach it to a stable surface. Ensure there is enough space around the pump for air circulation and maintenance.
2. **Inlet Connection:** Connect the inlet side of the pump to your water source. It is highly recommended to install the included 50 Mesh Inlet Strainer on the inlet line to prevent debris from entering the pump and causing damage. Use the appropriate 1/2" adapters (MNPT, Hose Barb, or Elbow) and PTFE tape for a watertight seal.
3. **Outlet Connection:** Connect the outlet side of the pump to your desired water distribution system (e.g., faucet, spray nozzle, RV plumbing). Use the appropriate 1/2" adapters and PTFE tape to ensure a leak-free connection.
4. **Electrical Connection:** Connect the pump to a 12Vdc power supply. Ensure correct polarity: red wire to positive (+), black wire to negative (-). It is advisable to install an inline fuse (not included) appropriate for the pump's current draw to protect the electrical system.
5. **Priming:** The pump has excellent self-priming capabilities. Before first use, ensure the inlet line is submerged in water and open a discharge valve on the outlet side to allow air to escape. The pump will begin to draw water and prime itself.



Image: KENCIT T33 pump with the 50 Mesh Inlet Strainer properly attached to the inlet port, ready for connection to a water source.

Operating Instructions

The KENCIT T33 pump is designed for automatic operation.

1. **Power On:** Once properly installed and connected to a 12Vdc power source, turn on the power supply to the pump.
2. **Automatic Operation:** The pump will automatically start when a demand for water is detected (e.g., opening a faucet, activating a spray nozzle). It will build pressure in the system.
3. **Automatic Shut-off:** When the water demand ceases and the system pressure reaches the pump's shut-off pressure (45 PSI), the built-in pressure switch will automatically turn off the pump.
4. **Continuous Use:** The pump is designed for intermittent duty. Avoid prolonged continuous operation without flow, as this can lead to overheating.

Maintenance

Regular maintenance ensures the longevity and efficient operation of your pump.

- **Inlet Strainer Cleaning:** Periodically inspect and clean the 50 Mesh Inlet Strainer to remove any accumulated debris. A clogged strainer can reduce pump performance and lead to premature wear.
- **Winterization:** If the pump is used in an environment where temperatures may drop below freezing, it must be drained completely or winterized with non-toxic RV antifreeze to prevent damage from freezing water.
- **Check for Leaks:** Regularly inspect all connections for leaks. Tighten fittings as necessary.
- **Inspect Wiring:** Check electrical connections for corrosion or loose wires.

Troubleshooting

Problem	Possible Cause	Solution
Pump does not turn on.	No power, incorrect wiring, blown fuse, faulty pressure switch.	Check power supply, verify wiring polarity, replace fuse, contact support if pressure switch is suspected.
Pump runs but no water flows.	Air in system, clogged inlet strainer, dry run for too long, kinked hose.	Ensure inlet is submerged and open outlet to bleed air, clean strainer, check hoses for kinks.
Pump cycles on and off rapidly.	Leak in system, restricted flow, faulty pressure switch.	Check all connections for leaks, ensure adequate flow, contact support if pressure switch is suspected.
Low flow or pressure.	Clogged inlet strainer, low voltage, restricted outlet, worn pump head.	Clean strainer, check power supply voltage, ensure clear outlet path, contact support for worn parts.

Warranty and Support

For warranty information or technical support, please refer to the warranty card included with your product or visit the official KENCIT website. You may also contact KENCIT customer service directly for assistance with troubleshooting or parts replacement.

Manufacturer: KENCIT

© 2023 KENCIT. All rights reserved. Information in this manual is subject to change without notice.

Ask a question about this manual

Ask about setup, troubleshooting, compatibility, parts, safety, or missing instructions. Manuals+ will review the question and use this page's manual context to help answer it.

Name

Anonymous

Email

you@example.com

After a successful submission, we securely hash the supplied account or form email before sending it to Microsoft Advertising for conversion attribution. Privacy details.

Question

Example: How do I reset this device or fix this error?

Details

Model number, symptoms, what you tried, or the section of the manual you are using.

Submit question

Open the live page

https://manuals.plus/asin/B0BYWFXVBP

More documents and user manuals: **https://manuals.plus/**