Saved from manuals.plus.
Open the live page for links to other documents and user manuals.

EZAIoT EZ-R7C.716-BK

EZAIoT WiFi Smart Thermostat R7C Series User Manual

Model: EZ-R7C.716-BK

1. Introduction

Thank you for choosing the EZAIoT WiFi Smart Thermostat R7C Series. This device is designed to provide intelligent temperature control for 220V electric underfloor heating systems, enhancing comfort and energy efficiency in your home. This manual provides essential information for the safe installation, setup, and operation of your thermostat. Please read it thoroughly before use and retain it for future reference.

2. Package Contents

Upon opening the package, please verify that all the following items are included:

- 1 x EZAIoT Smart Thermostat (Model EZ-R7C.716-BK)
- 1 x Instruction Manual
- 1 x External Temperature Sensor (NTC 10K 3m)
- 2 x Mounting Screws



Image: Contents of the EZAIoT Smart Thermostat package, including the thermostat, external sensor, and mounting screws.

3. Product Overview and Features

The EZAIoT Smart Thermostat is equipped with advanced features for optimal heating control:

- **Super IPS Screen:** Ultra-clear display with rich colors and a wide 178° viewing angle.
- **Integrated Sensors:** Built-in high-sensitivity temperature and humidity sensors for accurate indoor readings.
- **Weather Display:** Capable of displaying 38 weather conditions, including outdoor temperature and humidity.
- **Multiple Working Modes:** Supports Auto, Manual, and Temporary modes for flexible control.
- **Weekly Programming:** Customizable 5+2, 6+1, or 7-day programming with six time periods per day.
- **Remote Control:** Manage your heating system from anywhere using the 'Smart Life' or 'Tuya Smart' mobile application.
- **Voice Control:** Compatible with Amazon Alexa, Google Assistant, and Yandex Alice for hands-free operation.
- **Energy Saving:** Designed to help reduce annual energy costs.
- **Safety Features:** Includes Child Lock and Anti-freeze functions.

- **Power-loss Memory:** Retains settings in case of power interruption.
- **Multilingual Support:** Offers 7 language options for user interface.



Image: The EZAIoT Smart Thermostat displaying room temperature and humidity, alongside a smartphone showing the control app.



Image: A visual representation of the thermostat's multifunction screen, showing icons for Wi-Fi settings, auto mode, cloud service, engineer mode, and system settings.

Your browser does not support the video tag.

Video: A short preview showcasing the EZAIoT Thermostat R7C Series, highlighting its various color options, easy installation, colorful IPS screen with wide viewing angle, multiple working modes, precise temperature control, humidity display, multilevel menus, multilingual support, mechanical buttons, energy-saving capabilities, remote control via Tuya App, weekly programming, and smart voice control compatibility.

4. Installation

Warning: Installation must be performed by a qualified electrician in accordance with local electrical codes. Disconnect power at the circuit breaker before installation to prevent electric shock.

4.1 Compatibility

This thermostat is designed exclusively for **electric underfloor heating systems** (up to 16A). It requires live (L) and neutral (N) AC wires and is powered by AC100~240V. It is **not compatible** with boiler or water heating systems and does not support battery power.



Image: Illustrates that the thermostat works with electric heating systems (indicated by a green checkmark) but is not compatible with boiler or water heating systems (indicated by red crosses).

4.2 Wiring Diagram

Follow the wiring diagram carefully. Ensure all connections are secure and correctly matched to the terminals.



Image: Detailed wiring diagram showing connections for AC power (L, N), heating cables (16A), and the NTC external temperature sensor.

4.3 Mounting

The thermostat is designed for easy installation into a standard wall box. Refer to the product dimensions for precise fitting.

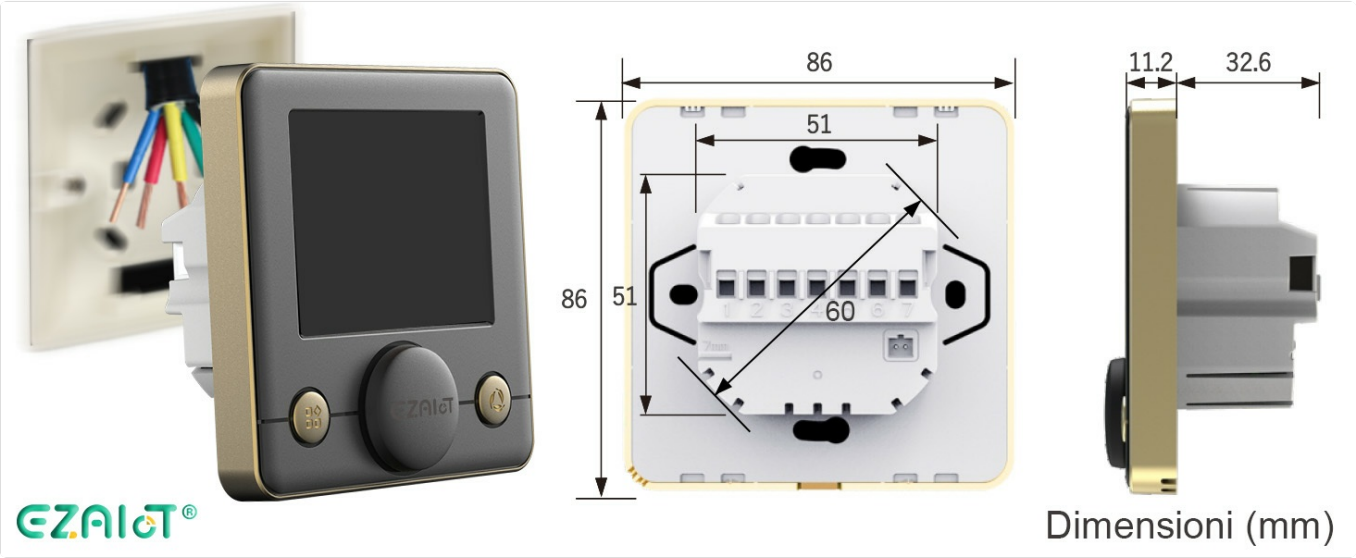

Image: Shows the side and rear views of the thermostat with dimensions in millimeters, illustrating how it fits into a wall-mounted electrical box.

5. Setup

5.1 Initial Power-On

After successful installation and power restoration, the thermostat will power on. You may need to set the language and basic time/date settings.

5.2 Wi-Fi Connection and App Pairing

To utilize smart features, connect your thermostat to your home Wi-Fi network and pair it with the 'Smart Life' or 'Tuya Smart' app.

1. Ensure your thermostat is in Wi-Fi pairing mode. This is typically accessed via the 'Wi-Fi Setting' menu on the device.

2. Download and install the 'Smart Life' or 'Tuya Smart' application on your mobile phone (available on iOS App Store and Google Play Store).
3. Open the app, register or log in, and select 'Add Device'.
4. Follow the in-app instructions to discover and add your thermostat. Ensure your phone is connected to a 2.4 GHz Wi-Fi network during pairing.

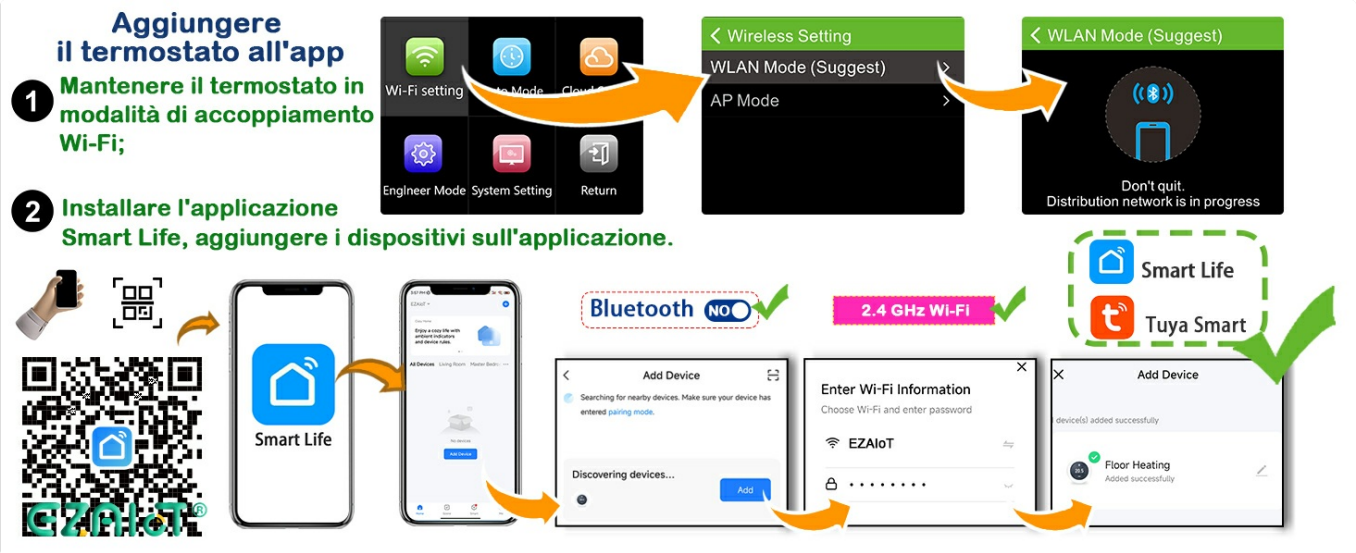

Image: Step-by-step visual guide for connecting the EZAIoT thermostat to the Smart Life app via Wi-Fi, including QR code for app download.

6. Operating Instructions

6.1 Basic Operation

The thermostat can be operated directly via its mechanical buttons and handwheel, or remotely via the mobile app.

- **Temperature Adjustment:** Use the handwheel or app to set the desired temperature. The setpoint temperature range is typically 5-95°C.
- **Mode Selection:** Switch between Auto, Manual, and Temporary modes.
- **Display Information:** The IPS screen shows current room temperature, outdoor temperature, humidity, time, and heating status.

6.2 Weekly Programming

Set up a personalized heating schedule to optimize comfort and energy savings.

- Access the programming menu via the thermostat or the mobile app.
- Choose a 5+2 (weekday/weekend), 6+1 (single day off), or 7-day (every day unique) schedule.
- Define up to six time periods per day with specific temperature settings (e.g., Wake up, Morning, Nooning, Afternoon, Evening, Night).

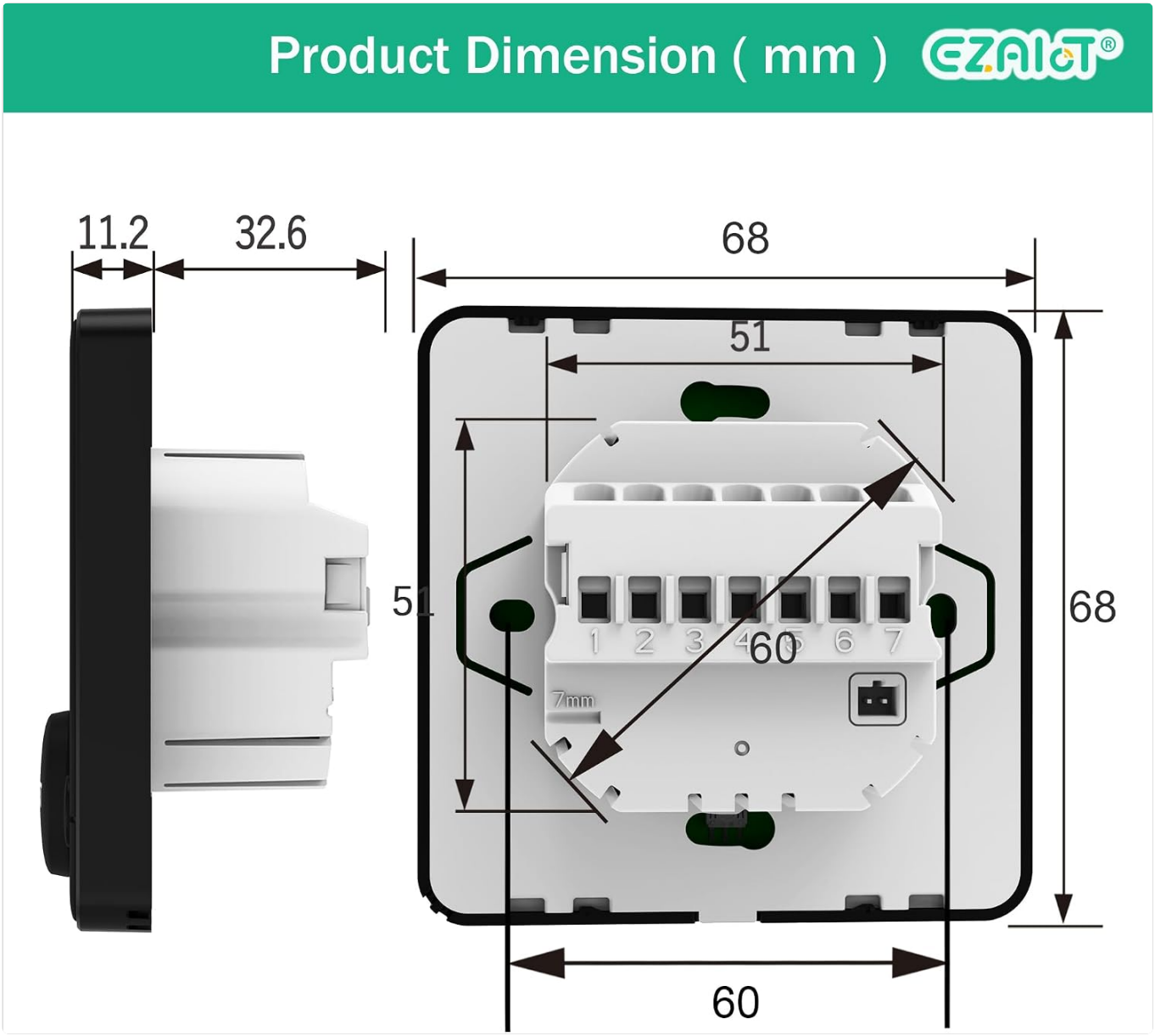

Image: Illustrates the weekly programming interface on the mobile app, showing six customizable events for weekdays and two for weekends.

6.3 Smart Voice Control

Integrate your thermostat with smart home assistants for convenient voice commands.

- Ensure your thermostat is connected to the 'Smart Life' or 'Tuya Smart' app.
- Link your 'Smart Life' or 'Tuya Smart' account to your Amazon Alexa, Google Assistant, or Yandex Alice account through their respective apps.
- Use commands such as: "Alexa, set the bedroom temperature to 22 degrees." or "Hey Google, turn on the kitchen heating."



Image: Depicts the thermostat's compatibility with Amazon Alexa and Google Assistant for voice control, showing example commands.

6.4 Child Lock and Anti-freeze

- **Child Lock:** Activate the child lock feature to prevent accidental changes to settings, especially useful in households with children.
- **Anti-freeze Function:** This feature automatically activates heating if the temperature drops below a set threshold, protecting pipes and heating systems from freezing.



Image: Illustrates the Anti-freeze protection, Child Lock feature, and Power-loss Memory function of the thermostat.

7. Maintenance

To ensure optimal performance and longevity of your EZAIoT Smart Thermostat, follow these maintenance guidelines:

- **Cleaning:** Regularly wipe the screen and exterior with a soft, dry cloth. Avoid using abrasive cleaners, solvents, or chemical sprays, as these can damage the surface.
- **Sensor Care:** Ensure the temperature and humidity sensors are not obstructed by furniture, curtains, or other objects, as this can affect reading accuracy.
- **Software Updates:** Periodically check the 'Smart Life' or 'Tuya Smart' app for firmware updates to ensure your thermostat has the latest features and security enhancements.
- **Avoid Extreme Conditions:** Do not expose the thermostat to direct sunlight, excessive moisture, or extreme

temperatures outside its operating range.

8. Troubleshooting

If you encounter issues with your thermostat, refer to the following common problems and solutions:

Problem	Possible Cause	Solution
Thermostat not powering on	No power supply; incorrect wiring.	Check circuit breaker. Verify wiring connections are secure and correct (L and N).
Cannot connect to Wi-Fi	Incorrect Wi-Fi password; 5GHz network; thermostat not in pairing mode; weak signal.	Ensure correct 2.4GHz Wi-Fi password. Put thermostat in Wi-Fi pairing mode. Move closer to router.
Heating not turning on/off	Incorrect mode; temperature setting too low/high; wiring issue.	Check if thermostat is in Manual or Auto mode. Adjust setpoint temperature. Verify heating element wiring.
Inaccurate temperature readings	Sensor obstruction; sensor fault; calibration needed.	Ensure sensors are clear. Check external sensor connection. Calibrate temperature via settings if necessary.
Voice control not working	App not linked; incorrect commands; internet connectivity issue.	Verify 'Smart Life'/'Tuya Smart' account is linked to voice assistant. Use correct commands. Check internet connection.

If the problem persists after attempting these solutions, please contact EZAIoT customer support for further assistance.

9. Specifications

Feature	Specification
Brand	EZAIoT
Model	EZ-R7C.716-BK
Color	Black
Product Dimensions	4.4 x 8.6 x 8.6 cm
Weight	240 grams
Wattage	1.8 watts
Voltage	220 Volt (AC)
Material	Acrylonitrile Butadiene Styrene (ABS)
Special Features	Voice Control, Humidity Display, Energy Saving
Controller Type	Amazon Alexa, Google Assistant, App

Feature	Specification
Temperature Sensor	External NTC 10K 3m
Max Load	16A

10. Warranty and Support

EZAIoT products are designed for reliability and performance. For warranty information, please refer to the documentation provided with your purchase or contact your retailer. For technical support, troubleshooting assistance, or any questions regarding your EZAIoT Smart Thermostat, please contact EZAIoT customer service. Our team is available to provide online support.

© 2023 EZAIoT. All rights reserved.

Ask a question about this manual

Ask about setup, troubleshooting, compatibility, parts, safety, or missing instructions. Manuals+ will review the question and use this page's manual context to help answer it.

Name

Anonymous

Email

you@example.com

After a successful submission, we securely hash the supplied account or form email before sending it to Microsoft Advertising for conversion attribution. Privacy details.

Question

Example: How do I reset this device or fix this error?

Details

Model number, symptoms, what you tried, or the section of the manual you are using.

Submit question

Open the live page

https://manuals.plus/asin/B0BXLT4LYW

More documents and user manuals: **https://manuals.plus/**