Saved from manuals.plus.
Open the live page for links to other documents and user manuals.

VEVOR Raised Garden Bed 4 x 2 x 1 ft

VEVOR 4x2x1 ft Galvanized Raised Garden Bed Kit Instruction Manual

Model: Raised Garden Bed 4 x 2 x 1 ft

Introduction

Thank you for choosing the VEVOR Galvanized Raised Garden Bed Kit. This manual provides essential information for the safe assembly, operation, and maintenance of your new garden bed. Please read these instructions carefully before use and retain them for future reference.

This raised garden bed is designed to provide an optimal environment for growing vegetables, flowers, and herbs. Its durable galvanized metal construction ensures longevity and resistance to outdoor elements.



Image: A VEVOR Galvanized Raised Garden Bed Kit, 4x2x1 ft, filled with a variety of healthy vegetables and flowers, situated in a lush green garden.

Safety Information

- Always wear the provided gloves during assembly to protect your hands from potential cuts or abrasions from metal edges.
- The edges of the raised garden bed are designed with folded edging and rubber strips for safety. Ensure these are properly installed to prevent injuries.
- Place the garden bed on a level and stable surface to prevent tipping.
- Keep children and pets away from the assembly area during installation.
- Do not overload the garden bed with excessive soil or materials beyond its structural capacity.

Package Contents

Before beginning assembly, please verify that all components are present and undamaged. If any parts are missing or damaged, contact VEVOR customer support.



Image: A detailed layout of all components included in the VEVOR Raised Garden Bed Kit, such as curved plates, flat plates, rubber strip, bolts, butterfly nuts, plant labels, gloves, planting tools, and weed barrier.

Included Components

Item	Description	Quantity
Curved Plate	Main corrugated metal panels for the bed sides	6
Flat Plate	Connecting corrugated metal panels	4
Rubber Strip	Edge protection for the top rim	1
Stainless Steel 201 Bolt	Fasteners for connecting panels	40
Stainless Steel 201 Butterfly Nut	Nuts for securing bolts	40
Plant Label	For marking plants	20
Gloves	For hand protection during assembly and gardening	1 pair

Item	Description	Quantity
Planting Tool Set	Includes 2 shovels and 1 rake	1 set
Weed Barrier	Bottom pad (28" x 51")	1

Assembly Instructions

The VEVOR Raised Garden Bed is designed for effortless assembly, typically taking about 5 minutes. No additional tools are required beyond what is provided.

Video Guide

▶ **Watch video online**
Metal Raised Garden Bed

Video: An official VEVOR video demonstrating the assembly process of the metal raised garden bed, including connecting panels and installing the protective rubber edging.

Step-by-Step Assembly

1. **Prepare Components:** Lay out all curved and flat metal plates, bolts, and butterfly nuts. Ensure you are wearing the provided gloves for hand protection.
2. **Connect Panels:** Begin by connecting two curved plates using the stainless steel bolts and butterfly nuts. Align the pre-drilled holes and hand-tighten the nuts.
3. **Form the Shape:** Continue connecting the remaining curved and flat plates to form the desired oval shape of the garden bed. The design allows for various configurations if you have multiple kits.
4. **Secure All Connections:** Once all panels are in place, ensure all bolts and nuts are securely tightened by hand.
5. **Install Rubber Edging:** Carefully place the black rubber strip along the top edge of the assembled garden bed. This provides a safe, non-sharp rim.

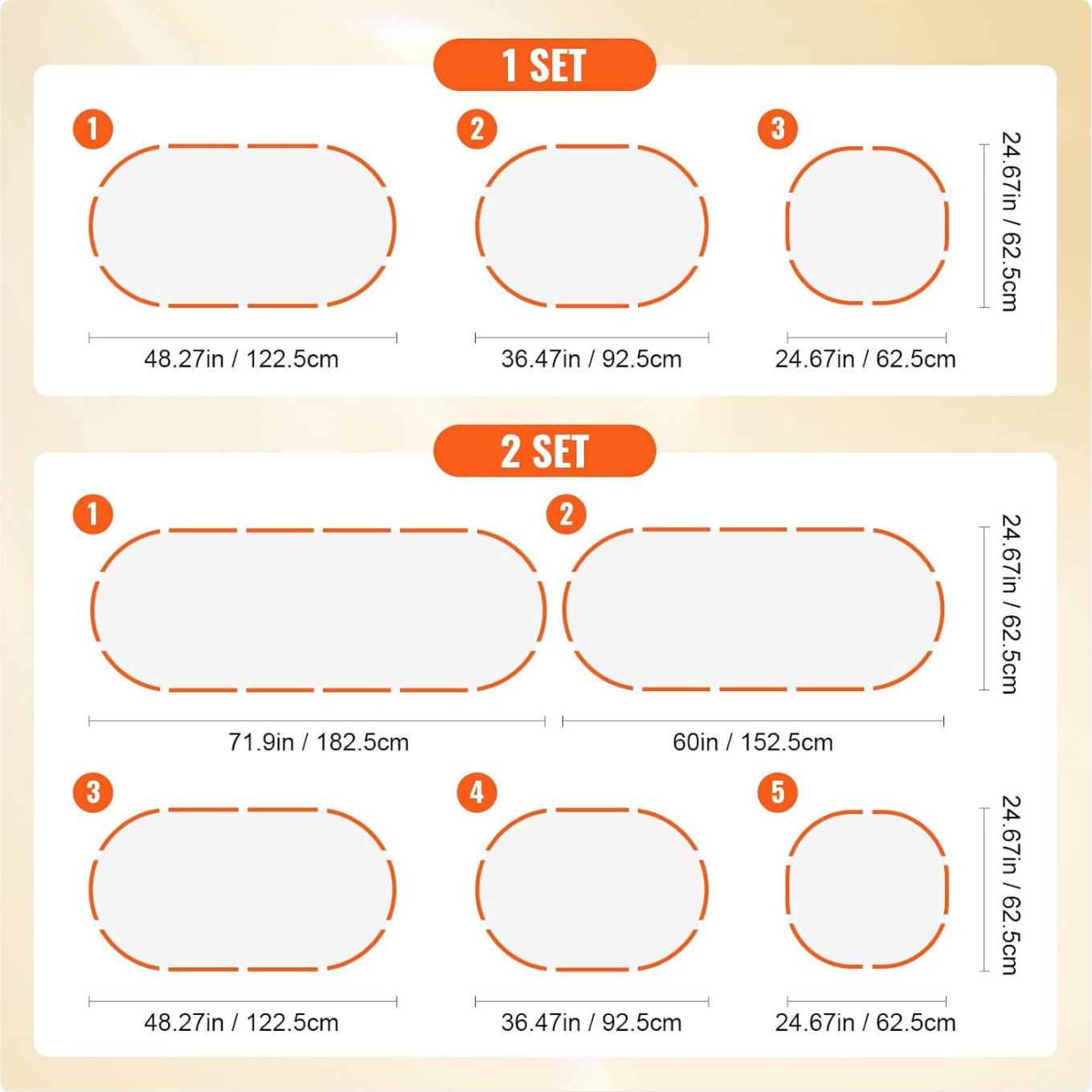

Image: A diagram showing various possible configurations for the raised garden bed, including oval shapes for a single set and larger rectangular or combined shapes for two sets, highlighting the modular design.

Operating Instructions

Preparing for Planting

1. **Placement:** Choose a location that receives adequate sunlight for your plants and is easily accessible for watering and maintenance.
2. **Bottom Pad (Optional):** The garden bed features an open bottom for excellent drainage. If you wish to protect your patio or prevent weeds from growing up from below, place the provided weed barrier (bottom pad) inside the bed before adding soil.
3. **Filling with Soil:** Fill the raised bed with high-quality gardening soil suitable for your chosen plants. Ensure the

soil level is a few inches below the top edge to prevent overflow during watering.



Image: A cross-section view of the raised garden bed illustrating its open bottom design, which allows for superior drainage and promotes healthier root growth for plants like carrots, peppers, and beans.

Planting and Care

- Use the included planting tools (shovels and rake) for easy planting and soil management.
- Utilize the plant labels to identify your crops.
- Water your plants regularly, especially during dry periods. The open bottom design helps prevent waterlogging.
- Monitor your plants for pests and diseases and take appropriate action as needed.

Maintenance

- **Cleaning:** Periodically clean the exterior of the garden bed with a damp cloth to remove dirt and debris. Avoid

abrasive cleaners that could damage the galvanized coating.

- **Inspection:** Regularly check all bolts and nuts to ensure they remain tight. Re-tighten if necessary.
- **Rust Prevention:** The double-layer galvanized metal with rust-proof coating is designed for outdoor use. However, prolonged exposure to harsh conditions or damage to the coating could lead to rust. Address any scratches or damage promptly with appropriate metal paint or sealant.
- **Winter Care:** In regions with harsh winters, consider emptying the bed or covering it to protect the soil and structure from extreme cold and moisture.

Troubleshooting

- **Wobbly Structure:** If the garden bed feels unstable after assembly, ensure all bolts and butterfly nuts are fully tightened. Check that the bed is placed on a flat, even surface.
- **Difficulty Connecting Panels:** Ensure panels are correctly aligned. Sometimes a slight adjustment or gentle pressure may be needed to align holes. Do not force components.
- **Water Drainage Issues:** The open bottom design promotes drainage. If water is pooling, check if the weed barrier (if used) is obstructing drainage or if the ground beneath is compacted.

Specifications

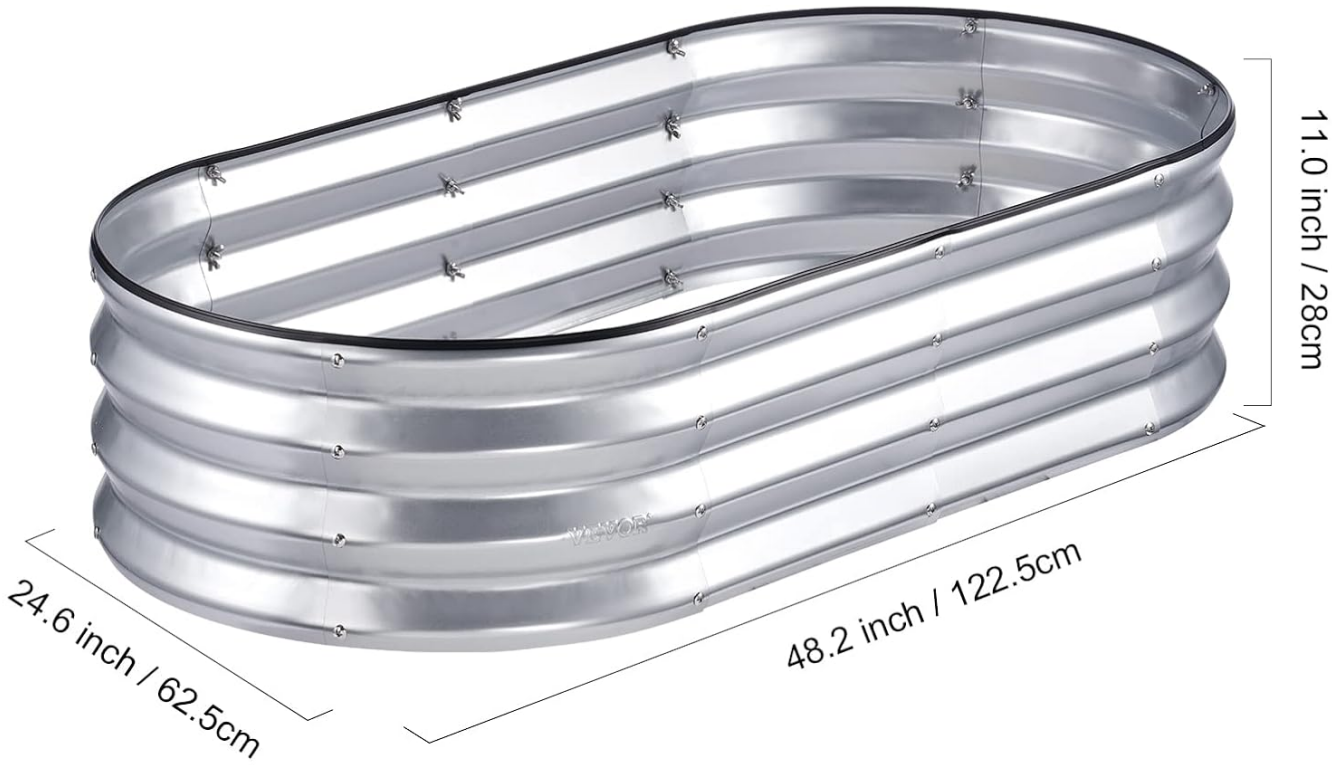

Product Size: **48.2 × 24.6 × 11.0 inch / 122.5 × 62.5 × 28 cm**

Net. Weight: **12.3 lbs / 5.6 kg**

Material: **Metal**

Finish: **Double-sided Galvanizing**

Color: **Silver**

Image: A visual representation of the VEVOR Raised Garden Bed with key dimensions labeled, including length, width, and height.

Feature	Detail
Model Number	Raised Garden Bed 4 x 2 x 1 ft
Material	Metal (Double-layer Galvanized)
Color	Silver
Dimensions (L x W x H)	47.2 x 23.6 x 11 inches (122.5 x 62.5 x 28 cm)
Item Weight	12.7 Pounds (5.6 kg)
Material Thickness	0.03 inches (0.8 mm)
Planter Form	Raised Bed
Special Features	Safety Edging, Wind Resistant, Open Bottom
Indoor/Outdoor Usage	Outdoor
Assembly Required	Yes

Warranty and Support

For warranty information or technical support, please refer to the official VEVOR website or contact their customer service directly. Keep your purchase receipt as proof of purchase.

© 2023 VEVOR. All rights reserved.

Ask a question about this manual

Ask about setup, troubleshooting, compatibility, parts, safety, or missing instructions. Manuals+ will review the question and use this page's manual context to help answer it.

Name

Anonymous

Email

you@example.com

After a successful submission, we securely hash the supplied account or form email before sending it to Microsoft Advertising for conversion attribution. Privacy details.

Question

Example: How do I reset this device or fix this error?

Details

Model number, symptoms, what you tried, or the section of the manual you are using.

Submit question

Open the live page

https://manuals.plus/asin/B0BXL4CYSH

More documents and user manuals: **https://manuals.plus/**