Manuals+
Q & A | Deep Search | Upload

Tera 1300

Tera Pro 1300 Wireless 1D 2D QR Barcode Scanner User Manual

Model: 1300

1. Product Overview

The Tera Pro 1300 is a compact and versatile barcode scanner designed for efficient data capture. It supports 1D and 2D barcodes, including QR codes, from both printed materials and digital screens. This device offers multiple connection options and features a long-lasting battery for extended use.

Image: The Tera Pro 1300 barcode scanner, a compact device designed for portability and ease of use.

Package Contents:

- Barcode Scanner (x1)
- USB Cable (x1)
- 2.4G USB Dongle (x1)
- User Manual (x1)

2. Setup and Connection

The Tera Pro 1300 offers three connection methods: Bluetooth, 2.4GHz Wireless, and USB Wired. Choose the method that best suits your device and environment.

Image: Visual representation of the three connection modes: Bluetooth, 2.4GHz Wireless via USB dongle, and USB Wired connection.

2.1. Charging the Scanner

Before first use, fully charge the scanner using the provided USB cable. Connect the small end of the USB cable to the scanner's charging port and the other end to a USB power adapter or a computer's USB port. A full charge typically takes 3-4 hours.

2.2. Bluetooth Connection

1. Ensure the scanner is powered on.
2. Scan the 'Bluetooth Pairing' barcode (refer to the included quick start guide or the full manual for specific barcode).
3. On your host device (laptop, PC, mobile phone, tablet), enable Bluetooth and search for available devices.
4. Select 'Tera 1300' or a similar name from the list of devices to pair.
5. The scanner will indicate successful pairing (e.g., a beep or LED change).

Supports HID, SPP, and BLE modes. Transmission distance is approximately 10m (33ft) in environments with obstacles.

2.3. 2.4GHz Wireless Connection

1. Insert the 2.4G USB dongle into an available USB port on your computer.
2. Ensure the scanner is powered on.
3. The scanner should automatically connect to the dongle. A successful connection is typically indicated by a beep or LED change.

This mode works with Windows XP/7/8/10, Mac OS, and Linux. The transmission distance can reach up to 60m (200ft) in open, barrier-free environments.

2.4. USB Wired Connection

1. Connect the scanner to your computer using the provided USB cable.
2. The scanner will function as a wired device and will also charge simultaneously.

3. Operating Instructions

3.1. Basic Scanning

Point the scanner's window at the barcode you wish to scan and press the trigger button. A successful scan will typically result in a beep and/or vibration, and the data will be transmitted to your connected device.

Image: The scanner demonstrates its ability to read various 1D and 2D barcodes, including those that are blurred, damaged, or have wide scanning angles.

3.2. Time Prefix/Suffix Function

This function allows you to add the current time as a prefix or suffix to scanned barcode data. This is useful for tracking the exact time of each scan.

- To enable/disable this feature, scan the specific setting barcodes provided in the full user manual.

Image: Example of barcode data being scanned and displayed on a computer screen, demonstrating the time prefix/suffix function.

3.3. Vibration Alert & Upload Modes

The scanner features a vibration alert, which can be used in quiet environments where audible beeps are undesirable. You can turn off the volume and rely on vibration for scan confirmation.

The scanner supports two upload modes:

- **Instant Upload Mode:** Barcode data is transmitted immediately after scanning.
- **Storage Mode:** Barcode data is stored internally in the scanner's memory. This mode is useful when the scanner is out of range of the receiver. The internal storage can hold up to 20,000 barcodes. Data can be batch uploaded to your device when reconnected.

3.4. Multi-Language Support

The scanner supports various keyboard layouts for different languages, including English, German, Spanish, Italian, French, Japanese, Belgian, Portuguese, and Dutch. Refer to the full manual for instructions on how to configure the scanner for your desired language.

Image: The scanner supports multiple languages, indicated by flags of various countries.

4. Maintenance

4.1. Battery Care

The Tera Pro 1300 is equipped with a 1200mAh battery, providing approximately 12 hours of continuous scanning or up to two weeks of daily use on a full charge. Standby time is approximately 96 hours.

- Avoid fully discharging the battery frequently to prolong its lifespan.
- Store the scanner in a cool, dry place when not in use for extended periods.
- Charge the scanner regularly, even if not in constant use, to maintain battery health.

Image: Details on the scanner's 1200mAh battery, offering 12 hours of continuous operation and 3-4 hours charging time.

4.2. Cleaning

To clean the scanner, use a soft, dry cloth. For stubborn dirt, a slightly damp cloth can be used, followed by a dry cloth. Avoid using harsh chemicals or abrasive materials, as these can damage the device.

5. Troubleshooting

If you encounter issues with your Tera Pro 1300 scanner, refer to the following common problems and solutions:

Problem	Possible Solution
Scanner does not power on.	Ensure the battery is charged. Connect the scanner to a power source using the USB cable.

Problem	Possible Solution
Scanner does not connect via Bluetooth/2.4GHz.	Verify the scanner is in the correct pairing mode. Ensure the dongle is properly inserted for 2.4GHz. Check Bluetooth settings on your host device. Try restarting both the scanner and the host device.
Scanned data is incorrect or inconsistent.	Ensure the barcode is clean and undamaged. Try scanning from a different angle or distance. Check if the scanner's configuration (e.g., prefix/suffix settings, keyboard layout) is correct for your needs. Perform a factory reset if necessary (refer to the full manual for the reset barcode).
Scanner adds extra characters (e.g., 'a') to scanned data.	This often indicates an incorrect keyboard language setting. Scan the appropriate language setting barcode from the full user manual to match your computer's keyboard layout.
Scanner does not read certain barcode types.	Ensure the barcode type is supported by the Tera Pro 1300 (see Specifications section). Some less common barcode types may require specific enabling scans from the manual.

6. Specifications

Feature	Detail
Model Number	1300
Dimensions	6.65 x 4.61 x 1.65 inches
Item Weight	7.4 ounces
Power Source	Battery Powered, Corded Electric
Battery Capacity	1200mAh
Continuous Working Time	Up to 12 hours
Charging Time	3-4 hours
Standby Time	Up to 96 hours
Connectivity Technology	2.4G Wireless, Bluetooth, USB Cable
Compatible Devices	Desktop, Laptop, Smartphone, Tablet (Windows XP/7/8/10, Mac OS, Windows Mobile, Android OS, iOS)
1D Decode Capability	Codabar, Code 11, Code93, MSI, Code 128, UCC/EAN-128, Code 39, EAN-8, EAN-13, UPC-A, ISBN, Industrial 25, Interleaved 25, Standard 25, 2/5 Matrix

Feature	Detail
2D Decode Capability	QR, PDF417, Data Matrix, Aztec code, Maxi Code
Real Angle of View	10 Degrees

7. Warranty and Support

For warranty information and technical support, please refer to the official Tera website or contact their customer service directly. Contact details are typically found on the product packaging or the manufacturer's website.

You can visit the Tera Store for additional product information and support resources:Tera Store on Amazon

© 2023 Tera. All rights reserved.

Related Documents - 1300

TR-UM017 Tera **Model No.: D5100** Wireless 2D Barcode Scanner **User Manual** Ver.02.1.05	Tera D5100 Wireless 2D Barcode Scanner User Manual Comprehensive user manual for the Tera D5100 Wireless 2D Barcode Scanner, detailing setup, operation modes, configuration, and support resources.
	Tera D5100Y Wired 2D Barcode Scanner User Manual User manual for the Tera D5100Y Wired 2D Barcode Scanner, detailing setup, configuration options, and usage instructions for optimal performance in retail, warehouse, and POS environments.
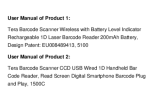 **User Manual of Product 1:** Tera Barcode Scanner Wireless with Battery Level Indicator Rechargeable 1D Laser Barcode Reader 200mAh Battery, Design Patent: EU008408413.1, 5100 **User Manual of Product 2:** Tera Barcode Scanner CCD USB Wired 1D Handheld Bar Code Reader, Read Screen Digital Smartphone Barcode Plug and Play, 1550C	Tera 5200C Wireless Barcode Scanner User Manual User manual for the Tera 5200C Wireless Barcode Scanner, detailing setup, features, specifications, connectivity options (2.4Ghz, Bluetooth, USB), and support information for Tera barcode scanners.

	[Tera HW0009 2D Barcode Scanner User Manual] Official user manual for the Tera HW0009 2D Area-imaging Barcode Scanner. This guide details setup, configuration, wireless (2.4G, Bluetooth) and USB connectivity, operation modes, and scanner settings for this handheld barcode reader with a digital display and charging cradle.
	[Tera 5100E Wireless/Wired 1D Laser Barcode Scanner User Manual] This user manual provides comprehensive instructions and specifications for the Tera 5100E Wireless/Wired 1D Laser Barcode Scanner, covering setup, configuration, and operation.
	[Tera 1D 2D / QR Wireless Bar Code Scanner User Guide - TR-UMHW0015] Comprehensive user guide for the Tera TR-UMHW0015 1D, 2D, and QR wireless barcode scanner. Learn about setup, settings, operation, and troubleshooting for efficient data capture.

Documents - Tera – 1300

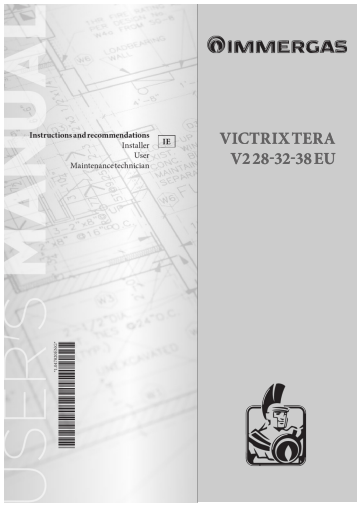

[pdf] User Manual Instructions Catalog

VICTRIX TERA V2 28 32 38 EU Immergas Sep 11 2023 — installation This instructions manual provides technical information for installing products As the other issues related to victrixterav228 38eu1 immergas ua image catalog manuals |||

1.047820ENG *1.047820ENG* Instructions and recommendations Installer IE User Maintenance technici ... D V6 20 B 10 60 50 40 Y2 30 20 10 0 0 0 100 200 300 400 500 600 700 800 900 1000 1100 1200 **1300** 1400 1500 1600 1700 1800 X1 35 Victrix Tera V2 32 EU 80 80 70 A V9 60 C D 50 Y1 40 ...

lang:fr score:33 filesize: 18.06 M page_count: 108 document date: 2023-05-15

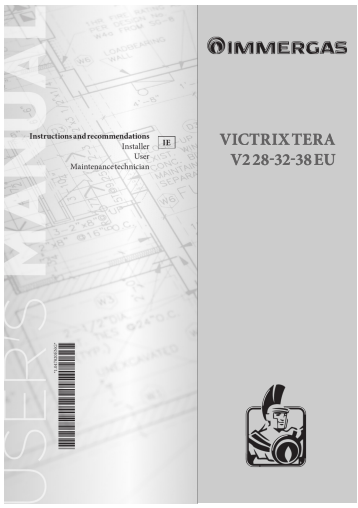

[Immergas Victrix Tera V2 Series Condensing Boilers: User, Installation, and Maintenance Manual]

Comprehensive guide for Immergas Victrix Tera V2 series condensing boilers (V28, V32, V38 EU). Covers installation, operation, maintenance, and technical details for installers, users, and technicians.

lang:fr score:32 filesize: 17.71 M page_count: 108 document date: 2022-12-02

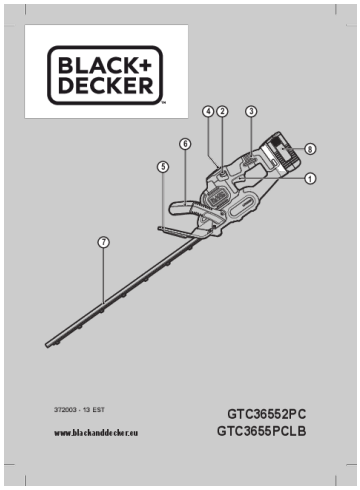

[pdf] User Manual

00294157 GTC36552PC GTC3655 ET RU H1 A5 310516 service blackanddecker nl i BLACK DECKER GLOBALBOM QW 1 Instruction Manual EN |||

42 3 6 8 5 1 7 372003 - 13 EST www.blackanddecker.eu GTC36552PC GTC3655PCLB Eesti keel Or ... ud mudel GTC3655PCLB Pinge Mahtuvus Tp VDC min-1 cm mm kg VDC Ah GTC36552PC H1 , GTC3655PCLB 36 **1300** 55 22 3,2 BL20362 36 2,0 Li-Ion Akulaadija vlja arvatud mudel GTC3655PCLB Sisendpinge Vljund...

lang:et score:30 filesize: 10.83 M page_count: 24 document date: 2016-05-26

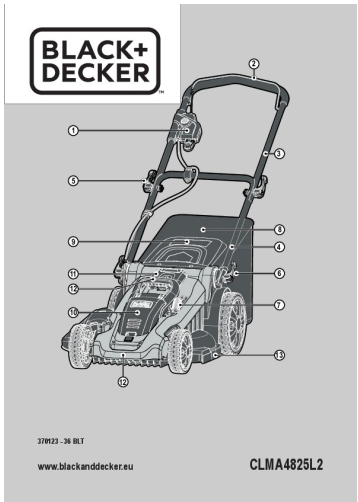

[pdf] User Manual

00435854 CLMA4825L2 BLT indd pour A4 100220 service blackanddecker nl i BLACK DECKER GLOBALBOM QW H2 Instruction Manual EN |||

1 5 9 11 12 10 12 370123 - 36 BLT www.blackanddecker.eu 2 3 8 4 6 7 13 CLMA4825L2 Eesti keel Or ... MA4825L2 H1 36V 2900 netokaal 21,24 kg, brutokaal 25,95 kg BL2536 36 2,5 Li-ioon 90616337-xx 230 36 **1300** 110 R. Laverick Tehnoloogiajuht lack Decker Europe, 210 Bath Road, Slough, Berkshire, SL1 3Y...

lang:et score:30 filesize: 29.22 M page_count: 72 document date: 2020-01-22

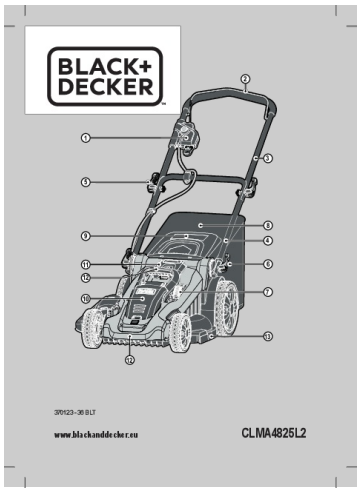

[pdf] User Manual

00435854 CLMA4825L2 BLT indd pour A5 100220 service blackanddecker nl i BLACK DECKER GLOBALBOM QW H2 Instruction Manual EN |||

1 5 9 11 12 10 12 370123 - 36 BLT www.blackanddecker.eu 2 3 8 4 6 7 13 CLMA4825L2 Eesti keel Or ... MA4825L2 H1 36V 2900 netokaal 21,24 kg, brutokaal 25,95 kg BL2536 36 2,5 Li-ioon 90616337-xx 230 36 **1300** 110 R. Laverick Tehnoloogiajuht lack Decker Europe, 210 Bath Road, Slough, Berkshire, SL1 3Y...

lang:et score:30 filesize: 28.4 M page_count: 72 document date: 2020-01-22

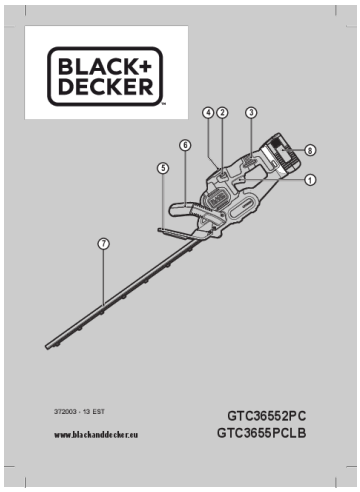

[pdf] User Manual

00294157 GTC36552PC GTC3655 ET RU EstoniaBLACK DECKERGTC36552PC H1 A5 310516service blackanddecker nl i BLACK DECKER GLOBALBOM QW GTC3655PC Instruction Manual EN 310516 |||

42 3 6 8 5 1 7 372003 - 13 EST www.blackanddecker.eu GTC36552PC GTC3655PCLB Eesti keel Or ... ud mudel GTC3655PCLB Pinge Mahtuvus Tp VDC min-1 cm mm kg VDC Ah GTC36552PC H1 , GTC3655PCLB 36 **1300** 55 22 3,2 BL20362 36 2,0 Li-Ion Akulaadija vlja arvatud mudel GTC3655PCLB Sisendpinge Vljund...

lang:et score:29 filesize: 10.83 M page_count: 24 document date: 2016-05-26

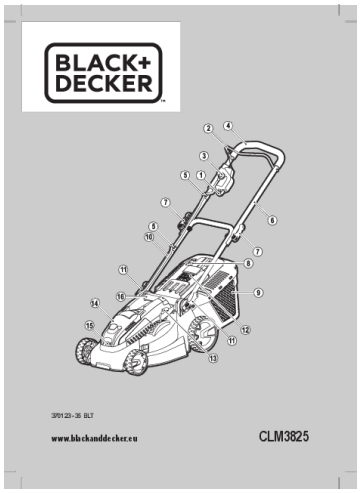

[pdf] User Manual

00435905 CLM3825 MULT BLT indd skarka A5 100220 service blackanddecker nl i BLACK DECKER GLOBALBOM QW CLM3825L2 H2 Instruction Manual EN |||

370123 - 35 BLT www.blackanddecker.eu CLM3825 Eesti keel Originaaljuhend 7 Lietuvi Origina ... mA Ligikaudne laadimisaeg h CLM3825 H 1 36 3500 16,2 BL2536-XJ 36 2,5 Li-ioon BDC2A36-QW 230 36 **1300** 1,52,0 Kmbla-ksivarre arvutatud vibratsioonivrtus: = 2,5 m/s2, mramatus K = 1,5 m/s2 2006...

lang:et score:29 filesize: 8.32 M page_count: 76 document date: 2020-01-21

[pdf] User Manual

00435905 CLM3825 MULT BLT indd skarka A4 100220 service blackanddecker nl i BLACK DECKER GLOBALBOM QW CLM3825L2 H2 Instruction Manual EN |||

370123 - 35 BLT www.blackanddecker.eu CLM3825 Eesti keel Originaaljuhend 7 Lietuvi Origina ... mA Ligikaudne laadimisaeg h CLM3825 H 1 36 3500 16,2 BL2536-XJ 36 2,5 Li-ioon BDC2A36-QW 230 36 **1300** 1,52,0 Kmbla-ksivarre arvutatud vibratsioonivrtus: = 2,5 m/s2, mramatus K = 1,5 m/s2 2006...

lang:et score:29 filesize: 8.38 M page_count: 76 document date: 2020-01-21

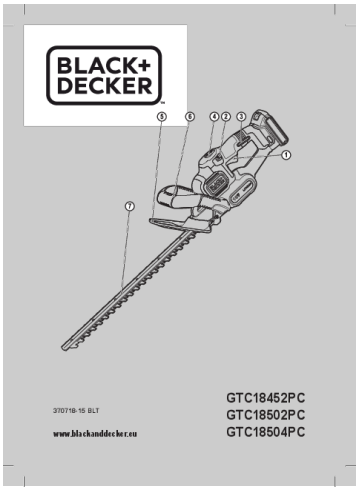

[pdf] User Manual

00437917 GTC18452PC GTC1850 BLT indd pour GTC18502PC GTC18504PC A5 170220 service blackanddecker nl i BLACK DECKER GLOBALBOM QW 1 Instruction Manual EN |||

370718-15 BLT www.blackanddecker.eu GTC18452PC GTC18502PC GTC18504PC Eesti keel Originaaljuhend ... Tp Akulaadija Sisendpinge Vljundpinge Voolutugevus GTC18452PC GTC18502PC GTC18504PC VDC min-1 18 **1300** 18 **1300** 18 **1300** cm 45 50 50 mm 18 18 18 kg 2,75 2,80 3,10 BL2018 BL2018 BL4018...

lang:et score:29 filesize: 12.04 M page_count: 44 document date: 2020-01-30

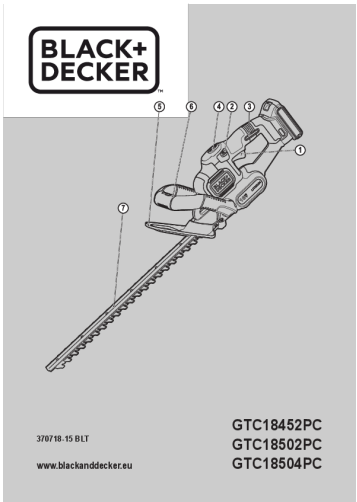

[pdf] User Manual

00437917 GTC18452PC GTC1850 BLT indd pour GTC18502PC GTC18504PC A4 170220 service blackanddecker nl i BLACK DECKER GLOBALBOM QW 1 Instruction Manual EN |||

370718-15 BLT www.blackanddecker.eu GTC18452PC GTC18502PC GTC18504PC Eesti keel Originaaljuhend ... nge VDC Terade liikumiskiirus min-1 thikigul Tera pikkus cm Teravahe mm Kaal kg Aku 18 **1300** 45 18 2,75 BL2018 18 **1300** 50 18 2,80 BL2018 18 **1300** 50 18 3,10 BL4018 Pinge Mahtuvus Tp VDC...

lang:et score:29 filesize: 12.35 M page_count: 44 document date: 2020-01-30

[pdf] User Manual Instructions

M3 SL 20 DUO 36 BOILER Saunainter FI ET RU DE EN SV 02032006 Asennusohje Monteringsanvisning Instructions for installation Manual Harvia Woodburning Stoves Duo RUS saunainter ru files get html id 1486 |||

M3 SL, 20 SL, 20 DUO, 36 DUO 20 BOILER, 20 SL BOILER FI Asennusohje SV Monteringsanvisning EN Instr ... via 20 SL A 430 mm 510 mm B 710 mm 760 mm C 390 mm 430 mm MIN.11445500 A MAX1. 51050 390 MIN **1300** . **1300** B C 210 MIN 610 . 610 DE Der Saunaofen wird in einer ffnung in einer Wand aus Beto...

lang:en score:25 filesize: 752.39 K page_count: 8 document date: 2007-05-07

[pdf] Guide

TeSys Active Tera Motor Management System Modbus RTU Communication Guide Schneider Electric 1100 6900 step 1 4150 Y Nominal voltage Vn 0x116E 4463 0x03 0x10 RW UINT16 0 50Hz 60Hz frequency Fn 0x116F 4464 DOCA0355EN 00 productinfo schneider electric tesys tera mug motor management system modbus rtu communication guide EN |||

TeSys Active TeSys Tera Motor Management System Modbus RTU Communication Guide TeSys offers innovati ... n setting 0x0ECE 3791 1 0x03, 0x06, 0x10 RW 0.1 C F UINT16 2501800 step 1 770-3560 step 1 **1300** Y PT100 pickup4 0x0ECF 3792 1 0x03, 0x06, 0x10 RW 1 UINT16 27004000 step 1 2700 Y P...

lang:en score:25 filesize: 7.51 M page_count: 146 document date: 2025-02-24

[pdf] Confidentiality Request Letter

Certifier40G Ordering Guide JDSU Ed Gastle Help For eAnixter Customers Class FA TERA channel test kit two adapters plus one cable for set reference External charger car PD386322 objects eanixter |||

Certifier40G Ordering Guide May 2014 Note that other items are available on price lists. This docume ... mpliant Multimode Fiber adapter for NGC-4500. Allows for Tier 1 certification testing at 850 nm and **1300** nm wavelengths with dual wavelength LED source 850nm and **1300**nm . Includes VFL and interchange...

lang:en score:25 filesize: 349.24 K page_count: 15 document date: 2014-08-01

BMW of North America, LLC
Pricing Guide
Model Year 2017
Suggested Retail Price

i3 94 Ah (i01)
Effective August 1, 2016

Series	Model Description	Body Group	NA Code	AG Code	Engine	SOP
BMW i	i3	i01	17A	1Z60	IB1	07/16
	i3 with Range Extender	i01	17B	1Z63	IB1	07/16

© 2016 BMW of North America, LLC. The BMW name, model names and logo are registered trademarks. All rights reserved. Released: 07/28/2016 1 of 6

[pdf] Guide

2017 BMW i3 i01 94 Ah Pricing Guide bimmerfest 80 bmw pricing |||

BMW of North America, LLC Pricing Guide Model Year 2017 Suggested Retail Price Series BMW i Model ... 1,300 x 0 x x x 1,000 x x x x 2,350 x x x x 1,000 x x x x 2,350 x x x x 1,300 1,300 **1300 1300 1300** ZGW, ZTW, ZWM 1,000 800 **1300 1300 1300** ZGW, ZTW, ZWM 1,000 800 995 995 Rele...

lang:en score:24 filesize: 176.07 K page_count: 6 document date: 2016-07-28

BMW of North America, LLC
Pricing Guide
Model Year 2017
Suggested Retail Price

i3 60 Ah Lower Range
Effective August 1, 2016

Series	Model Description	Body Group	NA Code	AG Code	Engine	SOP
BMW i	i3 60 Ah	i01	17E	1Z55	IB1	07/16

© 2016 BMW of North America, LLC. The BMW name, model names and logo are registered trademarks. All rights reserved. Released: 07/28/2016 1 of 5

[pdf] Guide

2017 BMW i3 i01 60 Ah Pricing Guide bimmerfest 80 bmw pricing |||

BMW of North America, LLC Pricing Guide Model Year 2017 Suggested Retail Price Series BMW i Model ... go are registered trademarks. All rights reserved. i3 60 Ah 1,000 x x x x 2,500 x x x x x 1,300 **1300 1300** ZGW, ZTW 800 995 STD STD STD STD STD STD STD STD STD STD STD STD STD STD STD STD STD STD STD STD STD...

lang:en score:24 filesize: 207.27 K page_count: 5 document date: 2016-07-28

[pdf] Dimension Guide Guide

THREAD GUIDE 1713613779965 1668315091 exhibitorsearch messefrankfurt images original document 10000009202401 327743 |||

THREAD GUIDE Industry The origin of our many achievements is the passion and our pioneering spirit ... elasticity for smocking effects Uniform wrapping of the elastic core thread No./Tkt. 25 15 dtex **1300** 1900 Needle NM 100 110 / 16 18 NM 100 130 / 16 21 Make-up 1,000 m K 1,000 m K Colours 12...

lang:en score:24 filesize: 4.33 M page_count: 36 document date: 2024-04-19

[pdf] User Manual Installation Guide Instructions Catalog

VICTRIX TERA V2 28 32 38 EU ImmergasVictrix Tera 1 To access the inside of appliance remove casing as indicated in Paragr 3 22 2 Unscrew 4 manifold victrixterav228 38eu1immergas ua image catalog manuals victrixterav228 38eu1 srsltid AfmBOoqAAT2AyNRlBjd4LBxLnQnmKnPeUZArZ 3glmxLNvVuDwMIuAKO ImmergasVICTRIX manifold Victrix 38eu1victrixterav228 AfmBOoqlPupFNTcubH5qSf4D clvXndd1Gm4Tu3UrYsGwoZnyTOeCpSximmergas 15 m straight for Victrix and 12 This length is obtained considering complete victrixterav228 3glmxLNvVuDwMIuAKOimmergas AfmBOorGe1OD8x 7lVitRDtdI YriNS 3YcIpVCH1HxvDxIie93wceeW

complete Victrix 3YcIpVCH1HxvDxIie93wceeWimmergas AfmBOoojgLl66YvEv
Y858T3y8Jc6bnxfcz0Hb29BwLS2TDEOJDd0CKi complete Tera complete Ø80 victrixterav228
Y858T3y8Jc6bnxfcz0Hb29BwLS2TDEOJDd0CKiimmergas AfmBOor4OVVBLXGZLc9O042u3JTT4cfX
hHvxc2rzZxARiPzl12bMfd5 Ø80 Tera hHvxc2rzZxARiPzl12bMfd5immergas AfmBOorwY9rVhOafHWHkN
EHIEZDxJF2TxEAG6jJ3oiCOI2i7QwVmsi1 EHIEZDxJF2TxEAG6jJ3oiCOI2i7QwVmsi1immergas
AfmBOooNS9sBhgQZF 90kScwIhiWVZt6y3TgRStHz75WvZcrG0X4xKtR Ø80 Victrix
AfmBOooJtNLpnCl5GOiEMmRPMOWPviSJfGSnsdxygfWgF5uzSgsmWOLCimmergas
90kScwIhiWVZt6y3TgRStHz75WvZcrG0X4xKtRimmergas AfmBOop6rkBCq254M vPkvOzOSjfb1D43
nwSuqAMfSO2 CVBCug45Ge AfmBOoptRT2SivuBzKHDCeSvpSYF8XrlLli23QCTKKw DOUlP
fRBfkpimmergas AfmBOor2 ucOgB 4gEQ9rm6Ws1zGYnqy9 bLQOqMKFIIntQHT4uHRbsCimmergas
complete Only professionally enabled companies are authorised to install Immergas gas appliances
Installation must be carried out according regulation standards victrixterav228
AfmBOop4ebWhUnwyMq3KjYMFFbFKqgKiywo67igQQb9vow9PMTepbKX4immergas standards Victrix
AfmBOopI QeycFk3X6pCaPVnRGSjZU08ET6gScZeTycEp5rVk DEz2RHimmergas
CVBCug45Geimmergas AfmBOorzEfPOWjSUmY AGGqR6cTowoG3vO815BG p7 K gr TYTwPcGv
AfmBOooJW7XOX2LFj4RNqeVJErUP9LSrywM4PD7BxjDPUEQPsUEx7YKpimmergas
AfmBOopRJxvyuaXsqrelCtnOIY9KYBa5jkv9O2VBX5U2PalxE5j0PLroimmergas 38eu1v1victrixterav228
AfmBOoqVNNGbc u7rhawBXCQenY4cMIUTDpVdLsRQT2NzDmY33IHr0pZimmergas 38eu1v1immergas
TYTwPcGvimmergas AfmBOorp4TOSarYz21fMGma2Q3aD2Vr1NM qql1WK4XttF4XfJ OA66g
AfmBOorvT9oOPwl4LuZbfRaPQNpuUJeIHxBd5aYZIspEtXYx4ULUEfYximmergas
AfmBOoq3hL6ABkYOV2lVGd 9ygc8cQ8SOCh1lUZqOdWXdA Vg4GvYVdpimmergas
AfmBOoqAUEkghCZmwlbQsQ8u0ly60SoX5vAUjz dN gL4yJkuYI8GJEVimmergas
AfmBOorv7T4cG3inGhhXwD 2MLa R45IuaaanXc42K K1vDi8zo5naZHimmergas AfmBOoo138jBpL F
czhiHFxDKvPaqNU dxX0RByA LnfdYIW338r MPimmergas OA66gimmergas
AfmBOoqT367KY04yyoApPPGSl8g6F0KZ5Px3FfWgMtk1muhKWzTrDnON
AfmBOoqiyfTH2WEDeVzQrQYIZz2PRkLGF0jNhKpw28hKfD9N8Y7QQV0immergas
AfmBOoqT367KY04yyoApPPGSl8g6F0KZ5Px3FfWgMtk1muhKWzTrDnONimmergas
AfmBOoqe22Kv6wk8uHzjQEeR Du77HmJZofr0g0sEVCMSOYauwnMtefB
Du77HmJZofr0g0sEVCMSOYauwnMtefBimmergas
AfmBOopO5yKnCIsSI3A3j83NlmtwN5KECi1T3gnpw4ft3SQWZfx8QYa8
AfmBOor8oNoCbxP95z39ETJvFsT9wIwJ472WRyIADu rpnHogw0bvUmjimmergas
AfmBOopS3qovCnrmQkfMbF4Y7DioKJkQ0 DXbnvEde p2SRex35eT5Eaimmergas
AfmBOooUDpU8zYZg VMUSSEv4WbXCtiBWTkXxQNy2oGByNOk893GNcXdimmergas AfmBOorw3PHi
HBDEz4VhHlMUO4O vCB4GqnEKBqG2nQsvxAlFL2r4oDimmergas
AfmBOoqOAzRANY77aZeWNq7DXgA jsf1pJMPL99b zeXGlJAVfV H93immergas
AfmBOopO5yKnCIsSI3A3j83NlmtwN5KECi1T3gnpw4ft3SQWZfx8QYa8immergas
AfmBOopYS5OZNdecHpERVo0g3QbtxMeTQTUgx7Tt77vTTuovdGfd9Qjg
AfmBOopb5T8nBdDDB3WyLSNLi4wSol8kg8yvwdBSsCY z5KD9PdTTo 1immergas
AfmBOopYS5OZNdecHpERVo0g3QbtxMeTQTUgx7Tt77vTTuovdGfd9Qjgimmergas AfmBOooEm4
Zy0mmemNBHk7MTtc2 KcBUwoPO2Kk1x4RgOSKKyxRLNwE
AfmBOoopWkOkSJMJNpz0BhQMtSOdmqtNZTwft99JWr4X5mbZborZ9gwDimmergas complete This
instructions manual provides technical information installing products As other issues related installation
products victrixterav228 AfmBOopsPswawIA3U69XBPH1O4DQPKP382Gkg
4I6ubrSS7yiyLSb8XCimmergas products This AfmBOoo4ARLct2f1CjtSG3DkrS
1jPtnK8gpI6ncY0TarlJEi2jJ5QcZimmergas products Victrix
AfmBOorLA4fHLfZB4i6ombfKX3YJbeYlTr5KLn qhXJgsbNdGB iVYVDimmergas
AfmBOoqe7r26rZhU2grIqEX7VgqYNqFmbgD8EHQlp37RMPXTlwr5MuH1immergas
KcBUwoPO2Kk1x4RgOSKKyxRLNwEimmergas AfmBOorFunnlSB7Lypp9dNlnCIgob de2dQG
9eldlljzGupeIRtlF AfmBOooZ9qlzsIMSyjSvQBOAO9tvBglH9lJKKdvYhmUv1L4XCQ2sDJUkimmergas
AfmBOopxFGQ8Y5yykX1AvuHkp7wtebf5kjRMjXSeIbHlYijBqCY70hiVimmergas AfmBOorFvv65MR3A1
4F azPCZps82JQqQUFLf0MV6UPrb6iNq4cQrzUimmergas AfmBOorURV8HgKrqS2TaMKo2Ily3O6nx9B
UkYTZbuwhh2eAm hH5QIjimmergas AfmBOooV9oVvl5jKV8xMUEZwJHqwHKB8dl0OqSNK aDMQZ

31ekM0FNyimmergas AfmBOor4ryt SDm6xBP8PX UWBxYK0SuyE z7ono6blJcHJeHdh9j5UPimmergas AfmBOoolicNWQWITLroHhz aRCySTtKa3P27XsKsmXD1MCI4ydsZRHE0immergas AfmBOoqIIqZxZejRUbpUkvq49eOX4YIjeRm 895YfA7vc2YjB7X60xapimmergas AfmBOoqutDZD9M9LgrpIYkSMLeaI14hLdLQKid46LX3lb Jz4sbdecmqimmergas AfmBOoqtr2YBobUZjFx69n4RdroZcGpua yyxddeCiVJiUoTD3 uv8a AfmBOopOEITl u2JZfwvWUrfI38wFspryv6yjpOjWkadqDiWE5kamlO3immergas azPCZps82JQqQUFLf0MV6UPrb6iNq4cQrzU AfmBOoopv9YWNV6WUknlWCsccFThtEhbNozb8Dhb5yMQGd a2 uuLGUPimmergas aRCySTtKa3P27XsKsmXD1MCI4ydsZRHE0 AfmBOorJJZiWZhLE4e4lG2d45DQbhUjIBUtjM0y8Oq47UxDPORInwQWimmergas z7ono6blJcHJeHdh9j5UP complete 12 flue systems kW provided conditions per current stand ards are victrixterav228 AfmBOoopBSe1xLB2XevqRjDXmtBqmC 8zmifr6 Pz Qdl0FMo8k2Ee Eimmergas AfmBOooZ9qlzsIMSyjSvQBOAO9tvBglH9lJKKdvYhmUv1L4XCQ2sDJUk ||| ||| *1.047820ENG* *1.047820ENG* Instructions and recommendations Installer IE User Maintenance technician VICTRIX TERA V2 28-32-38 EU INDEX Dear Customer .4 General Recommendations 5 Safety symbols used .6 Personal protective equipment 6 1 Unit ||| *1.047820ENG* *1.047820ENG* Instructions and recommendations Installer IE User Maintenance technician VICTRIX TERA V2 28-32-38 EU INDEX Dear Customer .4 General Recommendations 5 Safety symbols used .6 Personal protective equipment 6 1 Unit ||| *1.047820ENG* *1.047820ENG* Instructions and recommendations Installer IE User Maintenance technician VICTRIX TERA V2 28-32-38 EU INDEX Dear Customer .4 General Recommendations 5 Safety symbols used .6 Personal protective equipment 6 1 Unit ||| *1.047820ENG* *1.047820ENG* Instructions and recommendations Installer IE User Maintenance technician VICTRIX TERA V2 28-32-38 EU INDEX Dear Customer .4 General Recommendations 5 Safety symbols used .6 Personal protective equipment 6 1 Unit ||| *1.047820ENG* *1.047820ENG* Instructions and recommendations Installer IE User Maintenance technician VICTRIX TERA V2 28-32-38 EU INDEX Dear Customer .4 General Recommendations 5 Safety symbols used .6 Personal protective equipment 6 1 Unit ||| *1.047820ENG* *1.047820ENG* Instructions and recommendations Installer IE User Maintenance technician VICTRIX TERA V2 28-32-38 EU INDEX Dear Customer .4 General Recommendations 5 Safety symbols used .6 Personal protective equipment 6 1 Unit ||| *1.047820ENG* *1.047820ENG* Instructions and recommendations Installer IE User Maintenance technician VICTRIX TERA V2 28-32-38 EU INDEX Dear Customer .4 General Recommendations 5 Safety symbols used .6 Personal protective equipment 6 1 Unit ||| *1.047820ENG* *1.047820ENG* Instructions and recommendations Installer IE User Maintenance technician VICTRIX TERA V2 28-32-38 EU INDEX Dear Customer .4 General Recommendations 5 Safety symbols used .6 Personal protective equipment 6 1 Unit ||| *1.047820ENG* *1.047820ENG* Instructions and recommendations Installer IE User Maintenance technician VICTRIX TERA V2 28-32-38 EU INDEX Dear Customer .4 General Recommendations 5 Safety symbols used .6 Personal protective equipment 6 1 Unit ||| *1.047820ENG* *1.047820ENG* Instructions and recommendations Installer IE User Maintenance technician VICTRIX TERA V2 28-32-38 EU INDEX Dear Customer .4 General Recommendations 5 Safety symbols used .6 Personal protective equipment 6 1 Unit ||| *1.047820ENG* *1.047820ENG* Instructions and recommendations Installer IE User Maintenance technician VICTRIX TERA V2 28-32-38 EU INDEX Dear Customer .4 General Recommendations 5 Safety symbols used .6 Personal protective equipment 6 1 Unit ||| *1.047820ENG* *1.047820ENG* Instructions and recommendations Installer IE User Maintenance technician VICTRIX TERA V2 28-32-38 EU INDEX Dear Customer .4 General Recommendations 5 Safety symbols used .6 Personal protective equipment 6 1 Unit ||| *1.047820ENG* *1.047820ENG* Instructions and recommendations Installer IE User Maintenance technician VICTRIX TERA V2 28-32-38 EU INDEX Dear Customer .4 General Recommendations 5 Safety symbols used .6 Personal protective equipment 6 1 Unit ||| *1.047820ENG* *1.047820ENG* Instructions and recommendations Installer IE User Maintenance technician VICTRIX TERA V2 28-32-38 EU INDEX Dear Customer .4 General Recommendations 5 Safety symbols used .6 Personal protective equipment 6 1 Unit ||| *1.047820ENG* *1.047820ENG* Instructions and recommendations Installer IE User Maintenance technician VICTRIX TERA V2 28-32-38 EU INDEX Dear Customer .4 General Recommendations 5 Safety symbols used .6 Personal protective equipment 6 1 Unit ||| *1.047820ENG* *1.047820ENG* Instructions and recommendations Installer IE User Maintenance technician VICTRIX TERA V2 28-32-38 EU INDEX Dear Customer .4 General Recommendations 5 Safety symbols used .6 Personal protective equipment 6 1 Unit ||| *1.047820ENG* *1.047820ENG* Instructions and recommendations Installer IE User Maintenance technician VICTRIX TERA V2 28-32-38 EU INDEX Dear Customer .4 General Recommendations 5 Safety symbols used .6 Personal protective equipment 6 1 Unit ||| *1.047820ENG* *1.047820ENG* Instructions and recommendations Installer IE User Maintenance technician VICTRIX TERA V2 28-32-38 EU INDEX Dear Customer .4 General Recommendations 5 Safety symbols used .6 Personal protective equipment 6 1 Unit ||| *1.047820ENG* *1.047820ENG* Instructions and recommendations Installer IE User Maintenance

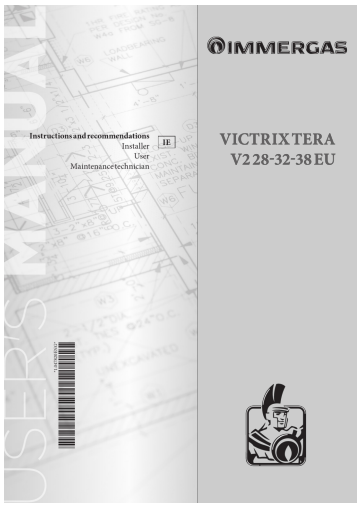

technician VICTRIX TERA V2 28-32-38 EU INDEX Dear Customer .4 General Recommendations 5 Safety symbols used .6 Personal protective equipment 6 1 Unit ||| *1.047820ENG* *1.047820ENG* Instructions and recommendations Installer IE User Maintenance technician VICTRIX TERA V2 28-32-38 EU INDEX Dear Customer .4 General Recommendations 5 Safety symbols used .6 Personal protective equipment 6 1 Unit ||| *1.047820ENG* *1.047820ENG* Instructions and recommendations Installer IE User Maintenance technician VICTRIX TERA V2 28-32-38 EU INDEX Dear Customer .4 General Recommendations 5 Safety symbols used .6 Personal protective equipment 6 1 Unit ||| *1.047820ENG* *1.047820ENG* Instructions and recommendations Installer IE User Maintenance technician VICTRIX TERA V2 28-32-38 EU INDEX Dear Customer .4 General Recommendations 5 Safety symbols used .6 Personal protective equipment 6 1 Unit ||| *1.047820ENG* *1.047820ENG* Instructions and recommendations Installer IE User Maintenance technician VICTRIX TERA V2 28-32-38 EU INDEX Dear Customer .4 General Recommendations 5 Safety symbols used .6 Personal protective equipment 6 1 Unit ||| *1.047820ENG* *1.047820ENG* Instructions and recommendations Installer IE User Maintenance technician VICTRIX TERA V2 28-32-38 EU INDEX Dear Customer .4 General Recommendations 5 Safety symbols used .6 Personal protective equipment 6 1 Unit ||| *1.047820ENG* *1.047820ENG* Instructions and recommendations Installer IE User Maintenance technician VICTRIX TERA V2 28-32-38 EU INDEX Dear Customer .4 General Recommendations 5 Safety symbols used .6 Personal protective equipment 6 1 Unit ||| *1.047820ENG* *1.047820ENG* Instructions and recommendations Installer IE User Maintenance technician VICTRIX TERA V2 28-32-38 EU INDEX Dear Customer .4 General Recommendations 5 Safety symbols used .6 Personal protective equipment 6 1 Unit ||| *1.047820ENG* *1.047820ENG* Instructions and recommendations Installer IE User Maintenance technician VICTRIX TERA V2 28-32-38 EU INDEX Dear Customer .4 General Recommendations 5 Safety symbols used .6 Personal protective equipment 6 1 Unit ||| *1.047820ENG* *1.047820ENG* Instructions and recommendations Installer IE User Maintenance technician VICTRIX TERA V2 28-32-38 EU INDEX Dear Customer .4 General Recommendations 5 Safety symbols used .6 Personal protective equipment 6 1 Unit ||| *1.047820ENG* *1.047820ENG* Instructions and recommendations Installer IE User Maintenance technician VICTRIX TERA V2 28-32-38 EU INDEX Dear Customer .4 General Recommendations 5 Safety symbols used .6 Personal protective equipment 6 1 Unit ||| *1.047820ENG* *1.047820ENG* Instructions and recommendations Installer IE User Maintenance technician VICTRIX TERA V2 28-32-38 EU INDEX Dear Customer .4 General Recommendations 5 Safety symbols used .6 Personal protective equipment 6 1 Unit ||| *1.047820ENG* *1.047820ENG* Instructions and recommendations Installer IE User Maintenance technician VICTRIX TERA V2 28-32-38 EU INDEX Dear Customer .4 General Recommendations 5 Safety symbols used .6 Personal protective equipment 6 1 Unit ||| *1.047820ENG* *1.047820ENG* Instructions and recommendations Installer IE User Maintenance technician VICTRIX TERA V2 28-32-38 EU INDEX Dear Customer .4 General Recommendations 5 Safety symbols used .6 Personal protective equipment 6 1 Unit ||| *1.047820ENG* *1.047820ENG* Instructions and recommendations Installer IE User Maintenance technician VICTRIX TERA V2 28-32-38 EU INDEX Dear Customer .4 General Recommendations 5 Safety symbols used .6 Personal protective equipment 6 1 Unit ||| *1.047820ENG* *1.047820ENG* Instructions and recommendations Installer IE User Maintenance technician VICTRIX TERA V2 28-32-38 EU INDEX Dear Customer .4 General Recommendations 5 Safety symbols used .6 Personal protective equipment 6 1 Unit ||| *1.047820ENG* *1.047820ENG* Instructions and recommendations Installer IE User Maintenance technician VICTRIX TERA V2 28-32-38 EU INDEX Dear Customer .4 General Recommendations 5 Safety symbols used .6 Personal protective equipment 6 1 Unit ||| *1.047820ENG* *1.047820ENG* Instructions and recommendations Installer IE User Maintenance technician VICTRIX TERA V2 28-32-38 EU INDEX Dear Customer .4 General Recommendations 5 Safety symbols used .6 Personal protective equipment 6 1 Unit ||| *1.047820ENG* *1.047820ENG* Instructions and recommendations Installer IE User Maintenance technician VICTRIX TERA V2 28-32-38 EU INDEX Dear Customer .4 General Recommendations 5 Safety symbols used .6 Personal protective equipment 6 1 Unit ||| *1.047820ENG* *1.047820ENG* Instructions and recommendations Installer IE User Maintenance technician VICTRIX TERA V2 28-32-38 EU INDEX Dear Customer .4 General Recommendations 5 Safety symbols used .6 Personal protective equipment 6 1 Unit ||| *1.047820ENG* *1.047820ENG* Instructions and recommendations Installer IE User Maintenance

technician VICTRIX TERA V2 28-32-38 EU INDEX Dear Customer .4 General Recommendations 5 Safety symbols used .6 Personal protective equipment 6 1 Unit ||| *1.047820ENG* *1.047820ENG* Instructions and recommendations Installer IE User Maintenance technician VICTRIX TERA V2 28-32-38 EU INDEX Dear Customer .4 General Recommendations 5 Safety symbols used .6 Personal protective equipment 6 1 Unit ||| *1.047820ENG* *1.047820ENG* Instructions and recommendations Installer IE User Maintenance technician VICTRIX TERA V2 28-32-38 EU INDEX Dear Customer .4 General Recommendations 5 Safety symbols used .6 Personal protective equipment 6 1 Unit ||| *1.047820ENG* *1.047820ENG* Instructions and recommendations Installer IE User Maintenance technician VICTRIX TERA V2 28-32-38 EU INDEX Dear Customer .4 General Recommendations 5 Safety symbols used .6 Personal protective equipment 6 1 Unit ||| *1.047820ENG* *1.047820ENG* Instructions and recommendations Installer IE User Maintenance technician VICTRIX TERA V2 28-32-38 EU INDEX Dear Customer .4 General Recommendations 5 Safety symbols used .6 Personal protective equipment 6 1 Unit ||| *1.047820ENG* *1.047820ENG* Instructions and recommendations Installer IE User Maintenance technician VICTRIX TERA V2 28-32-38 EU INDEX Dear Customer .4 General Recommendations 5 Safety symbols used .6 Personal protective equipment 6 1 Unit ||| *1.047820ENG* *1.047820ENG* Instructions and recommendations Installer IE User Maintenance technician VICTRIX TERA V2 28-32-38 EU INDEX Dear Customer .4 General Recommendations 5 Safety symbols used .6 Personal protective equipment 6 1 Unit ||| *1.047820ENG* *1.047820ENG* Instructions and recommendations Installer IE User Maintenance technician VICTRIX TERA V2 28-32-38 EU INDEX Dear Customer .4 General Recommendations 5 Safety symbols used .6 Personal protective equipment 6 1 Unit ||| *1.047820ENG* *1.047820ENG* Instructions and recommendations Installer IE User Maintenance technician VICTRIX TERA V2 28-32-38 EU INDEX Dear Customer .4 General Recommendations 5 Safety symbols used .6 Personal protective equipment 6 1 Unit ||| *1.047820ENG* *1.047820ENG* Instructions and recommendations Installer IE User Maintenance technician VICTRIX TERA V2 28-32-38 EU INDEX Dear Customer .4 General Recommendations 5 Safety symbols used .6 Personal protective equipment 6 1 Unit ||| *1.047820ENG* *1.047820ENG* Instructions and recommendations Installer IE User Maintenance technician VICTRIX TERA V2 28-32-38 EU INDEX Dear Customer .4 General Recommendations 5 Safety symbols used .6 Personal protective equipment 6 1 Unit ||| *1.047820ENG* *1.047820ENG* Instructions and recommendations Installer IE User Maintenance technician VICTRIX TERA V2 28-32-38 EU INDEX Dear Customer .4 General Recommendations 5 Safety symbols used .6 Personal protective equipment 6 1 Unit ||| *1.047820ENG* *1.047820ENG* Instructions and recommendations Installer IE User Maintenance technician VICTRIX TERA V2 28-32-38 EU INDEX Dear Customer .4 General Recommendations 5 Safety symbols used .6 Personal protective equipment 6 1 Unit ||| *1.047820ENG* *1.047820ENG* Instructions and recommendations Installer IE User Maintenance technician VICTRIX TERA V2 28-32-38 EU INDEX Dear Customer .4 General Recommendations 5 Safety symbols used .6 Personal protective equipment 6 1 Unit ||| *1.047820ENG* *1.047820ENG* Instructions and recommendations Installer IE User Maintenance technician VICTRIX TERA V2 28-32-38 EU INDEX Dear Customer .4 General Recommendations 5 Safety symbols used .6 Personal protective equipment 6 1 Unit ||| *1.047820ENG* *1.047820ENG* Instructions and recommendations Installer IE User Maintenance technician VICTRIX TERA V2 28-32-38 EU INDEX Dear Customer .4 General Recommendations 5 Safety symbols used .6 Personal protective equipment 6 1 Unit ||| *1.047820ENG* *1.047820ENG* Instructions and recommendations Installer IE User Maintenance technician VICTRIX TERA V2 28-32-38 EU INDEX Dear Customer .4 General Recommendations 5 Safety symbols used .6 Personal protective equipment 6 1 Unit ||| *1.047820ENG* *1.047820ENG* Instructions and recommendations Installer IE User Maintenance technician VICTRIX TERA V2 28-32-38 EU INDEX Dear Customer .4 General Recommendations 5 Safety symbols used .6 Personal protective equipment 6 1 Unit ||| *1.047820ENG* *1.047820ENG* Instructions and recommendations Installer IE User Maintenance technician VICTRIX TERA V2 28-32-38 EU INDEX Dear Customer .4 General Recommendations 5 Safety symbols used .6 Personal protective equipment 6 1 Unit ||| *1.047820ENG* *1.047820ENG* Instructions and recommendations Installer IE User Maintenance technician VICTRIX TERA V2 28-32-38 EU INDEX Dear Customer .4 General Recommendations 5 Safety symbols used .6 Personal protective equipment 6 1 Unit

1.047820ENG *1.047820ENG* Instructions and recommendations Installer IE User Maintenance technici ... D V6 20 B 10 60 50 40 Y2 30 20 10 0 0 0 100 200 300 400 500 600 700 800 900 1000 1100 1200 **1300** 1400 1500 1600 1700 1800 X1 35 Victrix Tera V2 32 EU 80 80 70 A V9 60 C D 50 Y1 40 ...
lang:fr score:23 filesize: 18.06 M page_count: 108 document date: 2023-05-15

Immergas 2019 Каталог: Газові котли, теплові насоси та геліосистеми
Ознайомтеся з повним каталогом продукції Immergas на 2019 рік, що охоплює газові котли, теплові насоси та геліосистеми. Детальний опис моделей, технічні характеристики та застосування для комерційного та побутового використання.
lang:tl score:23 filesize: 5.9 M page_count: 67 document date: 2021-08-09

[pdf] User Manual Instructions Catalog Price List
Technical ManualVictrix Tera V2 24 35 Plus SystemVictrix Instructions EU 1047821 000 ENGcdn shopify s files 1 1151 3080 Victrix ENG v 1692176701 VICTRIX TERA PLUS ImmergasTechnical and 12 m straight for This length is obtained considering the complete Ø80 exhaust terminal 1m of Victrix Systemvictrixterav224 35pluseu1Victrix ENGimmergas ua image catalog manuals victrixterav224 35pluseu1 srsltid AfmBOoogRK51UsK 6MGs2uBpSQcdtuvOLCUuzbEa40KcEPZo1Zz RzGpcdn ManualTechnical ENGVictrix 1692176701cdn ImmergasVICTRIX RzGpimmergas AfmBOop40gAiGElqtOtTs9s1fRMz1A42xBvdjzluw2hKtj1fjQ0mIcb0cdn AfmBOop40gAiGElqtOtTs9s1fRMz1A42xBvdjzluw2hKtj1fjQ0mIcb0immergas AfmBOoqLgfN6LQQGWNKR3XdiOlxiM9UyQ0gIrnhY1 BsKmCWYE 1GZ1Jcdn AfmBOoqy1 w0zt8aIkQp6GHeH0n24xe5zq5jAwQIaDWIavKxImOWczKjimmergas of Tera which can be combined with product consult Immergas website Price List or technical commercial documenVictrix 1GZ1Jimmergas AfmBOoqlgfYVjAG7LFR20ZusHrhedoCTWiMs5KRZbc6jvrNIjajOWt2ecdn documenTera AfmBOoo7IwK3OuKE4VXFFtGixPbwMTb7z8QVZEaIcZT1jhXh2lxFAmmYimmergas AfmBOoqlgfYVjAG7LFR20ZusHrhedoCTWiMs5KRZbc6jvrNIjajOWt2eimmergas AfmBOoqEsMzpJoVvaeU3NIXKQNRpZAF2 7LuKvsujceRx5hag9qiwdu8cdn 7LuKvsujceRx5hag9qiwdu8immergas AfmBOoq6H4t7W09Sjuhibiht0ffjRjxU94AstijUw0PmOLrQXZLIRlZJcdn AfmBOopehG5p mskS4uYdS7fjh3DGCQcHdbPHNUw6NTziuZtQ ulISTfimmergas AfmBOoq6H4t7W09Sjuhibiht0ffjRjxU94AstijUw0PmOLrQXZLIRlZJimmergas AfmBOoqqIbaqCFkk7rZ uuGZVvps3enm3 Y7PWemjGUg0jHfPTCGVQcfcdn Y7PWemjGUg0jHfPTCGVQcfimmergas AfmBOorurB5XKmMJzwgI 2cLIm4ALRTRwy47tWEz20qkxm1HQ0nIK23Rcdn 2cLIm4ALRTRwy47tWEz20qkxm1HQ0nIK23Rimmergas AfmBOoo7vCbXf0PCij6VuQZxVzBRxRB4veu9D7lEA04VG4H8CXiwxEdncdn AfmBOoo7vCbXf0PCij6VuQZxVzBRxRB4veu9D7lEA04VG4H8CXiwxEdnimmergas AfmBOoqFwDswlnQv15UVb2zR52FU3l8d h h6poa8Sh2mf1ExoF kZuccdn kZucimmergas AfmBOopW0UdFO52gPjvUf545Qhp491kieuijmK pAby84 52Nn46DsdPcdn 52Nn46DsdPimmergas AfmBOoqkGD25W9v91ALq Pot4Cfck4VwsPBT a3 TR9kJfAfUNIlJsGDcdn AfmBOoriy 6T0kTX2ZY DQjndmXI2TOOrm23alCpkh9R3HNCdITgLZuuimmergas of User section 2 Maintenance Technician 3 The user must carefully read instructions in specific must Victrix TR9kJfAfUNIlJsGDimmergas AfmBOoo2ARJEHUrFtc21 wrm 7hjVeBGcLUlO9KfptEsueHgcDJviO6acdn AfmBOoqdaKyF OQCFQzLHWQLI2iMNB0ZZeVSP4 E1wD idUIIOaGT rBimmergas Manual of documen User must System v1 immergas RzGp AfmBOop40gAiGElqtOtTs9s1fRMz1A42xBvdjzluw2hKtj1fjQ0mIcb0 w0zt8aIkQp6GHeH0n24xe5zq5jAwQIaDWIavKxImOWczKj 1GZ1J AfmBOoo7IwK3OuKE4VXFFtGixPbwMTb7z8QVZEaIcZT1jhXh2lxFAmmY AfmBOoqlgfYVjAG7LFR20ZusHrhedoCTWiMs5KRZbc6jvrNIjajOWt2e 7LuKvsujceRx5hag9qiwdu8 ulISTf AfmBOoq6H4t7W09Sjuhibiht0ffjRjxU94AstijUw0PmOLrQXZLIRlZJ Y7PWemjGUg0jHfPTCGVQcf 2cLIm4ALRTRwy47tWEz20qkxm1HQ0nIK23R AfmBOoo7vCbXf0PCij6VuQZxVzBRxRB4veu9D7lEA04VG4H8CXiwxEdn kZuc 52Nn46DsdP DQjndmXI2TOOrm23alCpkh9R3HNCdITgLZuu TR9kJfAfUNIlJsGD rB

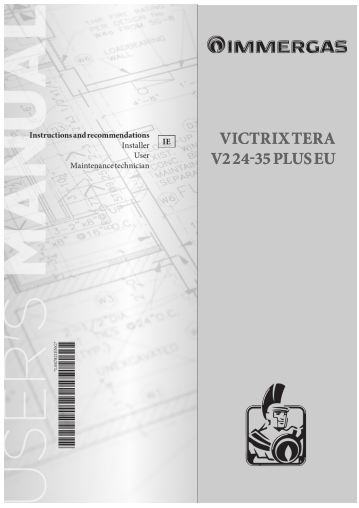

7hjVeBGcLUlO9KfptEsueHgcDJviO6a AfmBOoop0xFpmfmBN23bz4 NFQ5FfCtjVTcOcw4R7IJJOLmGtgnvERgo cdn 7hjVeBGcLUlO9KfptEsueHgcDJviO6aimmergas NFQ5FfCtjVTcOcw4R7IJJOLmGtgnvERgoimmergas AfmBOorpjPel3QinasMfb0kl5EIW2hzYjgLl a0bOBaU8AM XDn1vGmrcdn XDn1vGmrimmergas AfmBOooPLaHgr6n6BVlRhz8X0 3IVNKJF7hQMagYFlVPDs6rA8eB8Hzcdn 3IVNKJF7hQMagYFlVPDs6rA8eB8Hzimmergas AfmBOoptZDHD6df5PAIqnUgAPF1OY8Z FXJBeOx4KJEbXd36GKvL9w qcdn qimmergas AfmBOorJQBpZ mfrfL Z Qy3MNWLZs8Hzf0y44eTIQtgudMduHUQxZ9wcdn AfmBOoqqo 7BQ6EpeaKCOd2ebD 6 to75Z7c5t6kptobUXcHOdZB43 8immergas AfmBOoqOO wX42HvcDA0nAhzNH89iyLbxewyFEmtXKEh7Jyyi0 MqYdRimmergas Qy3MNWLZs8Hzf0y44eTIQtgudMduHUQxZ9wimmergas AfmBOooMN PvNsEnzIbS8paQmK 6x29mUmeb4o3eYm9koDTVmDLM4IEwcdn AfmBOooGwnV1OlYwNXElE85vkG6Ph6HviaWZgxvIfdH9X6t Uq15Or Simmergas AfmBOoohYzTLLmhce58U9l6TKjuutEKVYJW5I33Ga7JgQduzKmzWoyQSimmergas the Victrix 6x29mUmeb4o3eYm9koDTVmDLM4IEwimmergas AfmBOop8YlujKALgS44RltV2wZBhgk TwxwA6FhgmejFtHjFfS2VwWQCcdn AfmBOoqSCeZ8K01wJoeVWmAfiEoOrD8BrN37oEEG 8YfXT5 dAfc4 73immergas TwxwA6FhgmejFtHjFfS2VwWQCimmergas AfmBOoogZk2USkRuWFv7TbbP OzMT00XtmsiYhaO0aevn2FvI 8o tXocdn of 35 kW provided conditions as per current stand ards are To access inside of appliance Victrix tXoimmergas AfmBOoqEH7PhjXS1jJDO k8 e iAnfeXYFFXAXXC5UlckwcViQGaSySqcdn AfmBOopaZoFjDMr5vN8LHRfevaunCh hkcaDDjd Yrc00zz 4l1QGkUmimmergas the 35 AfmBOooRz bFgDGBrflLazaXgt56fAFgU0tI2g4Z9heCJBKTp8kJSH timmergas AfmBOoq4 MzxBVofJ6HwCO3jf3YO A25dhEmyx5HQOTy8LnhMrzE6kyvimmergas ||| ||| *1.047821ENG* *1.047821ENG* Instructions and recommendations Installer IE User Maintenance technician VICTRIX TERA V2 24-35 PLUS EU INDEX Dear Customer .4 General Recommendations 5 Safety symbols used .6 Personal protective equipment 6 1 Un ||| *1.047821ENG* *1.047821ENG* Instructions and recommendations Installer IE User Maintenance technician VICTRIX TERA V2 24-35 PLUS EU INDEX Dear Customer .4 General Recommendations 5 Safety symbols used .6 Personal protective equipment 6 1 Un ||| *1.047821ENG* *1.047821ENG* Instructions and recommendations Installer IE User Maintenance technician VICTRIX TERA V2 24-35 PLUS EU INDEX Dear Customer .4 General Recommendations 5 Safety symbols used .6 Personal protective equipment 6 1 Un ||| *1.047821ENG* *1.047821ENG* Instructions and recommendations Installer IE User Maintenance technician VICTRIX TERA V2 24-35 PLUS EU INDEX Dear Customer .4 General Recommendations 5 Safety symbols used .6 Personal protective equipment 6 1 Un ||| *1.047821ENG* *1.047821ENG* Instructions and recommendations Installer IE User Maintenance technician VICTRIX TERA V2 24-35 PLUS EU INDEX Dear Customer .4 General Recommendations 5 Safety symbols used .6 Personal protective equipment 6 1 Un ||| *1.047821ENG* *1.047821ENG* Instructions and recommendations Installer IE User Maintenance technician VICTRIX TERA V2 24-35 PLUS EU INDEX Dear Customer .4 General Recommendations 5 Safety symbols used .6 Personal protective equipment 6 1 Un ||| *1.047821ENG* *1.047821ENG* Instructions and recommendations Installer IE User Maintenance technician VICTRIX TERA V2 24-35 PLUS EU INDEX Dear Customer .4 General Recommendations 5 Safety symbols used .6 Personal protective equipment 6 1 Un ||| *1.047821ENG* *1.047821ENG* Instructions and recommendations Installer IE User Maintenance technician VICTRIX TERA V2 24-35 PLUS EU INDEX Dear Customer .4 General Recommendations 5 Safety symbols used .6 Personal protective equipment 6 1 Un ||| *1.047821ENG* *1.047821ENG* Instructions and recommendations Installer IE User Maintenance technician VICTRIX TERA V2 24-35 PLUS EU INDEX Dear Customer .4 General Recommendations 5 Safety symbols used .6 Personal protective equipment 6 1 Un ||| *1.047821ENG* *1.047821ENG* Instructions and recommendations Installer IE User Maintenance technician VICTRIX TERA V2 24-35 PLUS EU INDEX Dear Customer .4 General Recommendations 5 Safety symbols used .6 Personal protective equipment 6 1 Un ||| *1.047821ENG* *1.047821ENG* Instructions and recommendations Installer IE User Maintenance technician VICTRIX TERA V2 24-35 PLUS EU INDEX Dear Customer .4 General Recommendations 5 Safety symbols used .6 Personal protective equipment 6 1 Un ||| *1.047821ENG* *1.047821ENG* Instructions and recommendations Installer IE User Maintenance technician VICTRIX TERA V2 24-35 PLUS EU INDEX Dear Customer .4

General Recommendations 5 Safety symbols used .6 Personal protective equipment 6 1 Un ||| *1.047821ENG* *1.047821ENG* Instructions and recommendations Installer IE User Maintenance technician VICTRIX TERA V2 24-35 PLUS EU INDEX Dear Customer .4 General Recommendations 5 Safety symbols used .6 Personal protective equipment 6 1 Un ||| *1.047821ENG* *1.047821ENG* Instructions and recommendations Installer IE User Maintenance technician VICTRIX TERA V2 24-35 PLUS EU INDEX Dear Customer .4 General Recommendations 5 Safety symbols used .6 Personal protective equipment 6 1 Un ||| *1.047821ENG* *1.047821ENG* Instructions and recommendations Installer IE User Maintenance technician VICTRIX TERA V2 24-35 PLUS EU INDEX Dear Customer .4 General Recommendations 5 Safety symbols used .6 Personal protective equipment 6 1 Un ||| *1.047821ENG* *1.047821ENG* Instructions and recommendations Installer IE User Maintenance technician VICTRIX TERA V2 24-35 PLUS EU INDEX Dear Customer .4 General Recommendations 5 Safety symbols used .6 Personal protective equipment 6 1 Un

1.047821ENG *1.047821ENG* Instructions and recommendations Installer IE User Maintenance technici ... D V6 20 B 10 60 50 40 Y2 30 20 10 0 0 0 100 200 300 400 500 600 700 800 900 1000 1100 1200 **1300** 1400 1500 1600 1700 1800 Key Fig. 34 X1 = Flow rate l/h Y1 = Head kPa Y2 = Circulator pu...

lang:fr score:23 filesize: 16.8 M page_count: 104 document date: 2022-12-02

[pdf] Guide

TeSys Active Tera Motor Management System Modbus RTU Communication Guide Schneider Electric The information provided in this document contains general descriptions technical characteristics and or recommendations related to products solutionsTELTM9CU30ita sacchi mo cloudinary net PRODUCT DOCUMENT hlr system SCHNEIDER MD14 BMECAT 20250623 TELTM9CU30 ts 1751087311072 |||

TeSys Active TeSys Tera Motor Management System Modbus RTU Communication Guide TeSys offers innovati ... n setting 0x0ECE 3791 1 0x03, 0x06, 0x10 RW 0.1 C F UINT16 2501800 step 1 770-3560 step 1 **1300** Y PT100 pickup4 0x0ECF 3792 1 0x03, 0x06, 0x10 RW 1 UINT16 27004000 step 1 2700 Y P...

lang:en score:21 filesize: 7.51 M page_count: 146 document date: 2025-02-24

[pdf] User Manual Instructions Troubleshooting Guide Specifications Warranty

HYDROSTEAM 1300 RAPID MAXmanualdmi es 1738 110118 62485381 manual |||

HYDROSTEAM **1300** RAPID MAX Vaporeta de calentamiento r pido / Fast heating steam cleaner Manual de instrucciones Instruction manual Manuel d instructions Bedienungsanleitung Manuale di istruzioni Manual de instru es HYDROSTEAM 130H0aRnAdPIIDeiMdiAnXg 1 Instrukcja obs ugi N vod k pou...

lang:it score:20 filesize: 1.47 M page_count: 98 document date: 2024-06-03

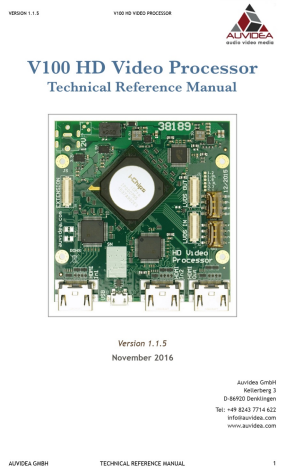

[pdf] User Manual

V100 reference manual 1 5 HD Video Processor Auvidea AUVIDEA GMBH TECHNICAL REFERENCE MANUAL Here the resolution will be fixed and may set by „i command The Technical Reference Manual Version November 2016 GmbH Kellerberg 3 D 86920 Denklingen Tel 49 8243 7714 622 info@auvidea technical auvidea

VERSION 1.1.5 V100 HD VIDEO PROCESSOR V100 HD Video Processor Technical Reference Manual AUVIDEA ... 1.5 V100 HD VIDEO PROCESSOR 5. define the second video window video 2 . The video window size is **1300**x800 pixels and the starting position from the top left corner is 500/100 horizontal/vertical ...

lang:en score:19 filesize: 2.12 M page_count: 35 document date: 2016-11-06

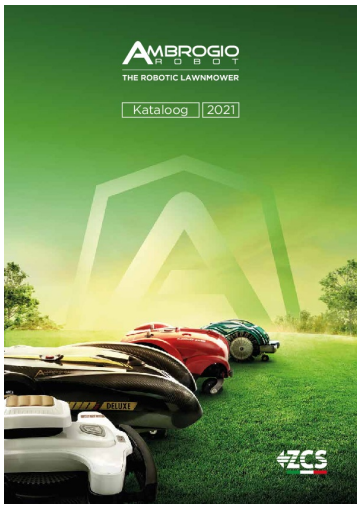

[pdf]

Kataloog 2021 Ambrogio Robot 03 29 — ET ambrogiorobot images manuals

Kataloog 2021 TOOTEVALIK LISATARVIKUD TEHNOLOOGIA Ambrogio robotniiduk P. 2 Robot kikide aedad ... tpi aedade jaoks 20000 m2 10000 m2 7000 m2 6000 m2 5000 m2 3500 m2 3200 m2 2600 m2 2200 m2 1800 m2 **1300** m2 UUS 1200 m2 1000 m2 800 m2 700 m2 600 m2 400 m2 UUS 200 m2 6 phjust, miks valida keskkonna...

lang:et score:19 filesize: 7.09 M page_count: 44 document date: 2020-12-10

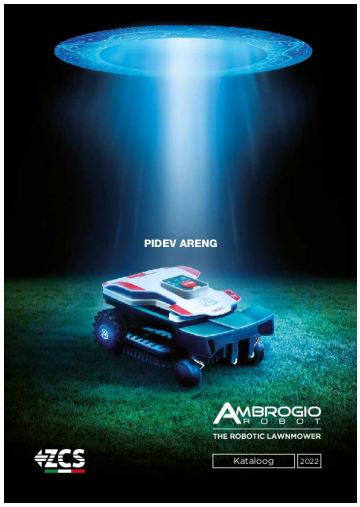

[pdf] Catalog

PIDEV ARENG CATALOGO 2022 AMBROGIO ET web ambrogiorobot images manuals |||

PIDEV ARENG Kataloog 2022 Ambrogio robotniiduk 6 phjust miks valida Ambrogio robot Robot iga ai ... 000 m2 5000 m2 3500 m2 UUS 3500 m2 UUS 3.500 m2 3200 m2 2500 m2 UUS 2200 m2 1800 m2 UUS 1400 m2 UUS **1300** m2 1000 m2 UUS 1000 m2 800 m2 700 m2 600 m2 400 m2 200 m2 TOOTEVALIK Robotniidukite uusimad ...

lang:et score:19 filesize: 6.95 M page_count: 44 document date: 2021-12-04

[pdf] User Manual

Manual de instalação Rosca Dupla Metal instalação Produto305102IdArquivo27986 aldo br produtos |||

ENERGIA QUE TRANSFORMA MANUAL DE INSTALAO Estrutura para Telha Fibrocimento Pratic Lite Para tera de ... 02 4 Parafuso T 08 5 Dual clamp end 04 6 Dual clamp mid 08 7 Emenda Pratic Lite 04 4 465 **1300** * 1134 2400 20 **1300** * **1300** * * Distncia recomendada. 2400 Para locais onde no seja possv...

lang:pt score:18 filesize: 4.98 M page_count: 4 document date: 2024-08-07

TR-UM1300

[pdf] User Manual

TR UM1300 Ver 01 1 2022 11 S1 Tera 1300 Wireless Barcode Scanner User Manualmanual internal 2023 10 Manual |||

...

lang:pt score:18 filesize: 14 M page_count: 98 document date: 2022-11-01

[pdf] User Manual

RRW IM 2021 SEASON adrian1 500 800 1000 1300 1500 1800 Orbegozo Aug 19 — Sonifer S A Avenida de Santiago 86 30007 Murcia España E mail sonifer@sonifer es orbegozo MADE IN P R C Lea atentamente este manual antes RRW1800 codilamar tienda otros manuales |||

EMISOR TRMICO - MANUAL DE INSTRUCCIONES ELECTRIC RADIATOR - INSTRUCTION MANUAL METTEUR THERMIQUE EMISSOR TRMICO- MANUAL DE INSTRUES RRW 500 800 1000 **1300** 1500 1800 Sonifer,S.A. Avenida de Santiago, 86 30007 Murcia Espaa E-mail: sonifer sonifer.es / www.orbegozo.com MADE IN P.R.C. Lea atentamente ...

lang:es score:17 filesize: 2.26 M page_count: 90 document date: 2021-08-16

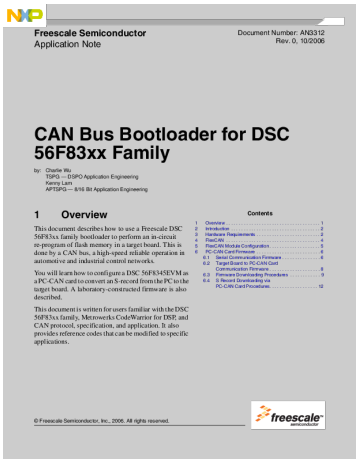

Freescale Semiconductor
Application Note

Document Number: AN3312
Rev. 0, 10/2006

CAN Bus Bootloader for DSC 56F83xx Family

by: Charlie Wu
TSPG — DSPO Application Engineering
Kenny Lam
APTSPG — 8/16 Bit Application Engineering

1 Overview

This document describes how to use a Freescale DSC 56F83xx family bootloader to perform an in-circuit re-program of flash memory in a target board. This is done by a CAN bus, a high-speed reliable operation in automotive and industrial control networks.

You will learn how to configure a DSC 56F8345EVM as a PC-CAN card to convert an S-record from the PC to the target board. A laboratory-constructed firmware is also described.

This document is written for users familiar with the DSC 56F83xx family, Metrowerks CodeWarrior for DSP, and CAN protocol, specification, and application. It also provides reference codes that can be modified to specific applications.

Contents

1 Overview 1
2 Introduction 2
3 Hardware Requirements 2
4 FlexCAN 4
5 FlexCAN Module Configuration 5
6 PC-CAN Card Firmware 8
6.1 PC-CAN Card Communication Firmware 8
6.2 Target Board to PC-CAN Card Communication Firmware 8
6.3 Firmware Downloading Procedures 9
6.4 S Record Downloading via PC-CAN Card Procedures 12

© Freescale Semiconductor, Inc., 2006. All rights reserved.

freescale semiconductor

[pdf]

AN3312 CAN Bus Bootloader for DSC 56F83xx Family Application Notes A PC card is a useful tool debugging and or upgrading firmware via the bus The family offers dedicated flash block boot bootloader which commonly uses asynchronous communication protocol such as SCI SPI to reduce hardware wires This document guides you in configuring 56F8346 FlexCAN module Freescale Semiconductor Inc NXP interface between with Xon Xoff of target board configures with nxp docs en application note

Freescale Semiconductor Application Note Document Number: AN3312 Rev. 0, 10/2006 CAN Bus Bootloade ... com USA/Europe or Locations Not Listed: Freescale Semiconductor Technical Information Center, CH370 **1300** N. Alma School Road Chandler, Arizona 85224 1-800-521-6274 or 1-480-768-2130 support freescal...

lang:en score:16 filesize: 690.61 K page_count: 20 document date: 0000-00-00

M3 SL, 20 SL, 20 DUO, 36 DUO
20 BOILER, 20 SL BOILER

FI Asennusohje
SV Monteringsanvisning
EN Instructions for Installation
DE Montageanleitung
RU Инструкция по монтажу каменки
ET Paigaldusjuhend

20 DUO,
36 DUO

M3 SL
20 SL
20 SL BOILER

02092006

[pdf] User Manual Instructions

Manual Harvia M3 SL Stufa Sauna A Legna Sl Con Le Pietre 760 01 € Woodburning Stoves Duo GER amilano shop mediafiles Pdf |||

M3 SL, 20 SL, 20 DUO, 36 DUO 20 BOILER, 20 SL BOILER FI Asennusohje SV Monteringsanvisning EN Instr ... via 20 SL A 430 mm 510 mm B 710 mm 760 mm C 390 mm 430 mm MIN.11445500 A MAX1. 51050 390 MIN **1300** . **1300** B C 210 MIN 610 . 610 DE Der Saunaofen wird in einer ffnung in einer Wand aus Beto...

lang:en score:16 filesize: 826.93 K page_count: 0 document date: 0000-00-00

LOGOSOL

KASUTUSJUHEND

Art nr 0458-395-0717

RED: 2

HAAGISEKOMPLEKT TRAILERKIT
1300 KG
B751 PRO / B1001

EE

[pdf] User Manual

trailer kit 1300kg user manual ee rev2 logosol store dl file id 760 product 0 kasutusjuhend haagisekomplekt trailerkit 1300 kg b751 pro b1001 ||| ||| KASUTUSJUHEND Art nr 0458-395-0717 RED: 2 HAAGISEKOMPLEKT TRAILERKIT 1300 KG B751 PRO / B1001 EE TNAME, ET VALISITE LOGOSOLI MASINA Meil on hea meel, et nitate les usaldust meie vastu, ostes selle masina. Teeme kik endast oleneva, et vastat

KASUTUSJUHEND Art nr 0458-395-0717 RED: 2 HAAGISEKOMPLEKT TRAILERKIT **1300** KG B751 PRO / B1001 EE TNAME, ET VALISITE LOGOSOLI MASINA Meil on hea meel, et nitate les usaldust meie vastu, ostes selle masina. Teeme kik endast oleneva, et vastata teie ootustele. Logosol on valmistanud saage alates 198...

lang:et score:16 filesize: 6.97 M page_count: 20 document date: 2023-03-01

[pdf] User Manual

INSTRUÇÃO DE MONTAGEM MESA 1x4 10° a 25° MÓDULOS COM LARGURA ATÉ 1134 ELGIN JULHO 22 cdr FPRS manual estrutura solo mesa 10 25graus 45ms elgin content br assets arquivos |||

MANUAL DE INSTALAO SISTEMA ESTRUTURAL DE SOLO - MESA 1x4 - 10 A 25 CARGA DE VENTO AT 45m/s MDULOS CO ... presenta os componentes utilizados na montagem do cavalete. Figura 9 COTA G: Comprimento da viga = **1300**mm COTA H: ngulo de inclinao da mesa: Regulvel entre 10 e 25 www.elgin.com.br/energia-solar In...

lang:pt score:15 filesize: 6.17 M page_count: 23 document date: 2023-07-21

[pdf]

Sweepers Australia New RCM Tera Rider Floor Scrubber Larger sweepersaustralia au cms |||

TERA Watch the video I EFFICIENTE, POTENTE E ROBUSTA EN EFFICIENT, POWERFUL AND STRONG ES EFICIENTE, ... i lavoro ed rispettosa dell ambiente. Tre le versioni disponibili, con pista di lavaggio da 1100 e **1300** mm con spazzole a disco od a rullo. Offre una grande autonomia di lavoro grazie al serbatoio so...

lang:it score:15 filesize: 7.39 M page_count: 6 document date: 2015-06-15

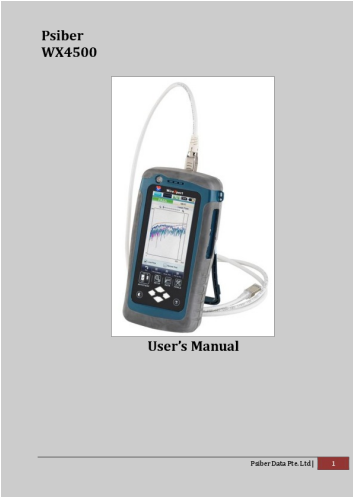

[pdf] User Manual Guide Warranty

Angela Dove Psiber WX4500 User s Manual Alternetivo Manufacturer Name Data Pte Ltd Address 03 005 iHub 9 Jurong Town Hall Road Singapore 609431 WireXpertUserManual alternetivo cz info files |||

Psiber WX4500 User s Manual Psiber Data Pte. Ltd 1 Notices Manual Part Number Psiber Data Pte. ... certification software license Multimode Fiber adapter set for certification testing at 850 nm and **1300** nm wavelengths with dual wavelength source 850nm VCSEL and **1300**nm LED light source Singlemode...

lang:en score:15 filesize: 4.33 M page_count: 40 document date: 2011-04-26

[pdf] User Manual

Manual de instalação Suporte Z instalação Coloque o módulo sobre os perfis alumínio Faça primeiro a fixação da lateral do utilizando Dual Clamp End segundo e faça Produto305167IdArquivo27988 aldo br produtos |||

ENERGIA QUE TRANSFORMA MANUAL DE INSTALAO Estrutura para Telha Ondulada Metlica Pratic Lite Fixador ... E US RT AR SU TSUORL AA SR ESSO L A R E S www.romagnole.com.br Projeto executivo 1 7 6 5 4 465 **1300** * 1134 2400 20 **1300** * 2 **1300** * * Distncia recomendada. 2400 1 Mdulo 04 2 Fixador Z 08...

lang:pt score:15 filesize: 4.53 M page_count: 4 document date: 2024-08-07

[pdf] Instructions

HP TERA pichler de |||

Anleitung TERA V5 Thank you for purchasing a Tera V5 kit Tera is a high performance, light glider ... hen mglichst mit Ballast und laufendem Motor. Technische Daten Fluggewicht = ab 600g Antriebsakku = **1300**mAh, 11.V Spinner = 32-34mm mit Klappluftschraube 9x5 passend zum Motor Motor = Pichler BOOST ...

lang:de score:15 filesize: 219.94 K page_count: 4 document date: 2023-05-22

[pdf]

Plasmarc skärbrännare ESAB 2023 06 20 — Utrustningen fungerar enligt denna bruksanvisning och medföljande etiketter skyltar om den mon teras används underhålls repareras enligt 36 puslapiai 0558007600sv manuals esab private library instructionmanuals brandsvictor |||

PT-38 Plasmarc skrbrnnare Instruktionshandbok SV P/N 0558006786 - PT-38-skrbrnnare, 25 7.6 m P/ ... . 333 Frbrukningsmateriallista - PC-**1300**/1600:.....

lang:no score:15 filesize: 3.71 M page_count: 36 document date: 2011-04-06

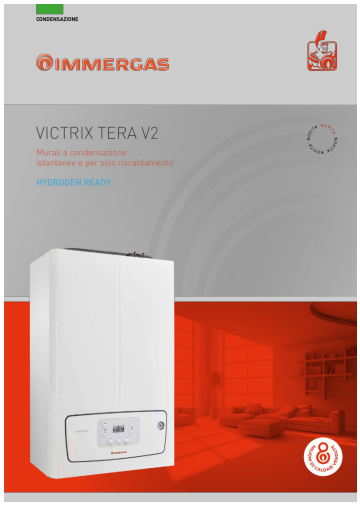

[pdf]

VICTRIX TERA V2 immergas media Prodotto 63d279c7bc8e3c6a1f42b67e |||

CONDENSAZIONE TA NOVI VICTRIX TERA V2 TA NOVI Murali a condensazione istantanee e per solo ris ... 9 D 30 30 Vel. 6 20 20 B 10 10 0 0 0 100 200 300 400 500 600 700 800 900 1000 1100 1200 **1300** 1400 1500 1600 1700 1800 Portata l/h Prevalenza kPa Grafico portata e prevalenza VICTRIX...

lang:it score:15 filesize: 3.78 M page_count: 24 document date: 2023-04-05

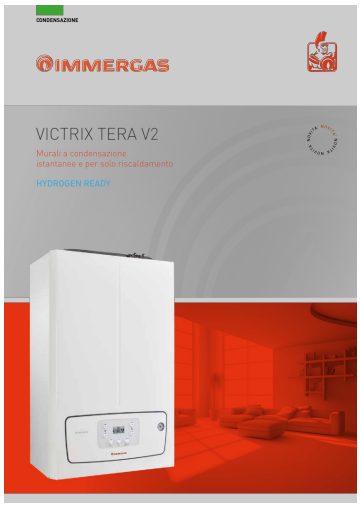

[pdf]

VICTRIX TERA V2 immergas media Prodotto 63f6441e1638a283b25589a7 |||

CONDENSAZIONE TA NOVI TA NOVI TA NOVI VICTRIX TERA V2 TA NOVI Murali a condensazione istan ... 9 D 30 30 Vel. 6 20 20 B 10 10 0 0 0 100 200 300 400 500 600 700 800 900 1000 1100 1200 **1300** 1400 1500 1600 1700 1800 Portata l/h Prevalenza kPa Grafico portata e prevalenza VICTRIX...

lang:it score:15 filesize: 3.76 M page_count: 24 document date: 2023-11-07

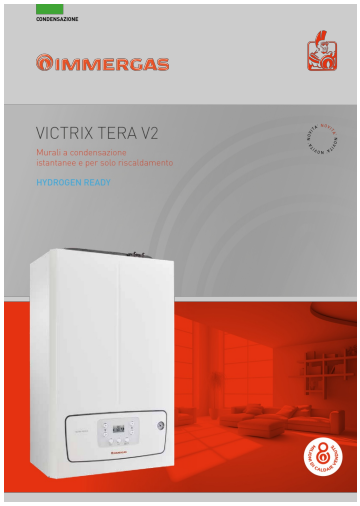

[pdf]

Scheda Tecnica TERA V2 IMMERGAS VICTRIX 28 kW LPG CONDENSATION BOILER 3 032928GPL scheda tecnica immergas tera v2 www id it en attachment 956 |||

CONDENSAZIONE TA NOVI VICTRIX TERA V2 TA NOVI Murali a condensazione istantanee e per solo ris ... 9 D 30 30 Vel. 6 20 20 B 10 10 0 0 0 100 200 300 400 500 600 700 800 900 1000 1100 1200 **1300** 1400 1500 1600 1700 1800 Portata l/h Prevalenza kPa Grafico portata e prevalenza VICTRIX...

lang:it score:15 filesize: 3.83 M page_count: 24 document date: 2023-01-27

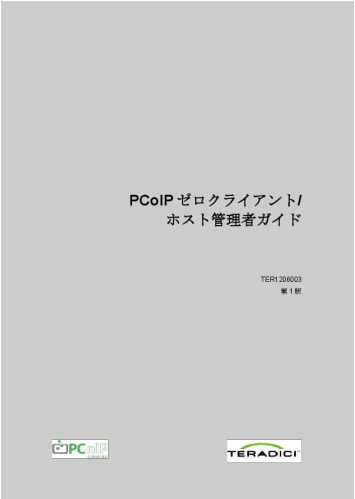

[pdf] User Manual

PCoIP TERA1100 TERA1202 Tera Tera elsa vixel admin manualelsa jp co html manual elsa |||

PCoIP / TER1206003 1 Teradici Corporation #101-4621 Canada Way, Burnaby, BC V5G 4X8 Canada p 1 6 ... imum MTU Size MTU Maximum MTU Size 6001500 PCoIP PCoIP MTU 1400 VMware View PCoIP MTU **1300** TER1206003 1 127 Enable SNMP PCoIP SNMP SNMP SNMP SNMP PCoIP SNMP MIB SNMP NM...

lang:fr score:15 filesize: 4.85 M page_count: 0 document date: 2014-11-18

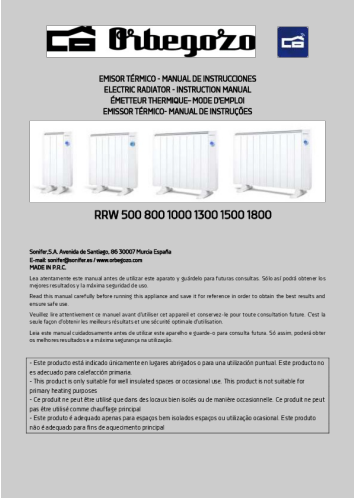

[pdf] User Manual

Carlos Garcia RRW 500 800 1000 1300 1500 1800 Orbegozo Sonifer S A Avenida de Santiago 86 30007 Murcia España E mail sonifer@sonifer es orbegozo MADE IN P R C Lea atentamente este manual antes IM 2021 03 |||

EMISOR TRMICO - MANUAL DE INSTRUCCIONES ELECTRIC RADIATOR - INSTRUCTION MANUAL METTEUR THERMIQUE MODE D EMPLOI EMISSOR TRMICO- MANUAL DE INSTRUES RRW 500 800 1000 **1300** 1500 1800 Sonifer,S.A. Avenida de Santiago, 86 30007 Murcia Espaa E-mail: sonifer sonifer.es / www.orbegozo.com MADE IN P.R.C. Lea a...

lang:es score:15 filesize: 3.02 M page_count: 90 document date: 2021-03-16

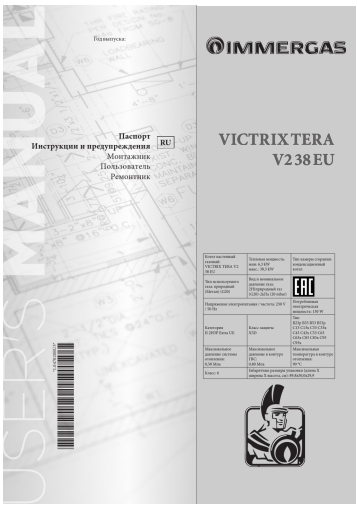

[pdf] User Manual Catalog

Download VICTRIX TERA V2 28 EU tera38usermanual new toon am webroot myfiles files catalogs immergas |||

: RU VICTRIX TERA V2 38 EU : VICTRIX TERA V2 38 EU : : 6,3 kW .: 38,3 kW : : ... D V6 20 B 10 60 50 40 Y2 30 20 10 0 0 0 100 200 300 400 500 600 700 800 900 1000 1100 1200 **1300** 1400 1500 1600 1700 1800 X1 34 Victrix Tera V2 32 EU 80 80 70 A V9 60 C D 50 Y1 40 ...

lang:i-klingon score:14 filesize: 17.33 M page_count: 112 document date: 2023-08-29

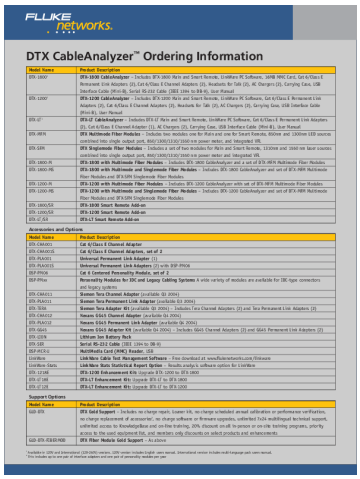

FLUKE networks.

DTX CableAnalyzer™ Ordering Information

Model Name	Product Description
DTX-1800	**DTX-1800 CableAnalyzer** – Includes DTX-1800 Main and Smart Remote, LinkWare PC Software, 10MB MMC Card, Cat 6/Class E Permanent Link Adapters (2), Cat 6/Class E Channel Adapters (2), Headsets for Talk (2), AC Chargers (2), Carrying Case, USB Interface Cable (Mini-B), Serial RS-232 Cable (DB9 10m to DB-9), User Manual
DTX-1200	**DTX-1200 CableAnalyzer** – Includes DTX-1200 Main and Smart Remote, LinkWare PC Software, Cat 6/Class E Permanent Link Adapters (2), Cat 6/Class E Channel Adapters (2), Headsets for Talk (2), AC Chargers (2), Carrying Case, USB Interface Cable (Mini-B), User Manual
DTX-LT	**DTX-LT CableAnalyzer** – Includes DTX-LT Main and Smart Remote, LinkWare PC Software, Cat 6/Class E Permanent Link Adapters (2), Cat 6/Class E Channel Adapter (1), AC Chargers (2), Carrying Case, USB Interface Cable (Mini-B), User Manual
DTX-MFM	**DTX Multimode Fiber Modules** – Includes two modules one for Main and one for Smart Remote, 850nm and 1300nm LED sources combined into single output port, 850/1300/1310/1550 nm power meter, and integrated VFL
DTX-SFM	**DTX Singlemode Fiber Modules** – Includes a set of two modules for Main and Smart Remote, 1310nm and 1550 nm laser sources combined into single output port, 850/1300/1310/1550 nm power meter and integrated VFL
DTX-1800-MF	**DTX-1800 with Multimode Fiber Modules** – Includes DTX-1800 CableAnalyzer and a set of DTX-MFM Multimode Fiber Modules
DTX-1800-MS	**DTX-1800 with Multimode and Singlemode Fiber Modules** – Includes DTX-1800 CableAnalyzer and set of DTX-MFM Multimode Fiber Modules and DTX-SFM Singlemode Fiber Modules
DTX-1200-MF	**DTX-1200 with Multimode Fiber Modules** – Includes DTX-1200 CableAnalyzer with set of DTX-MFM Multimode Fiber Modules
DTX-1200-MS	**DTX-1200 with Multimode and Singlemode Fiber Modules** – Includes DTX-1200 CableAnalyzer and set of DTX-MFM Multimode Fiber Modules and DTX-SFM Singlemode Fiber Modules
DTX-1800/SR	**DTX-1800 Smart Remote Add-on**
DTX-1200/SR	**DTX-1200 Smart Remote Add-on**
DTX-LT/SR	**DTX-LT Smart Remote Add-on**

Accessories and Options

Model Name	Product Description
DTX-CAA001	**Cat 6/Class E Channel Adapter**
DTX-CAA001/S	**Cat 6/Class E Channel Adapter, set of 2**
DTX-PLA001	**Universal Permanent Link Adapter** (1)
DTX-PLA001/S	**Universal Permanent Link Adapters** (2) with DSP-PRO6
DSP-PRO6	**Cat 6 Centered Personality Module, set of 2**
DSP-PRm	**Personality Modules for IDC and Legacy Cabling Systems** A wide variety of modules are available for IDC-type connectors and legacy systems
DTX-CAA011	**Siemon Tera Channel Adapter** (available Q2 2006)
DTX-PLA011	**Siemon Tera Permanent Link Adapter** (available Q2 2006)
DTX-TERA	**Siemon Tera Adapter Kit** (available Q2 2006) – Includes Tera Channel Adapters (2) and Tera Permanent Link Adapters (2)
DTX-CAA022	**Nexans GigaS Channel Adapter** (available Q4 2006)
DTX-PLA022	**Nexans GigaS Permanent Link Adapter** (available Q4 2006)
DTX-GigaS	**Nexans GigaS Adapter Kit** (available Q4 2006) – Includes GigaS Channel Adapters (2) and GigaS Permanent Link Adapters (2)
DTX-LION	**LiIONjam Jam Battery Pack**
DTX-SER	**Serial RS-232 Cable** (DB9 10m to DB-9)
DSP-MCR-G	**MultiMedia Card (MMC) Reader**, USB
LinkWare	**LinkWare Cable Test Management Software** – Free download at www.flukenetworks.com/linkware
LinkWare-Stats	**LinkWare Stats Statistical Report Option** – Results analysis software option for LinkWare
DTX-1200E	**DTX-1200 Enhancement Kit:** Upgrade DTX-1200 to DTX-1800
DTX-LT1800	**DTX-LT Enhancement Kit:** Upgrade DTX-LT to DTX-1800
DTX-LT1200	**DTX-LT Enhancement Kit:** Upgrade DTX-LT to DTX-1200

Support Options

Model Name	Product Description
GOLD-DTX	**DTX Gold Support** – Includes no-charge repairs, loaner kits, no-charge scheduled annual calibration or performance verification, no-charge replacement of accessories*, no-charge software or firmware upgrades, unlimited 7x24 multilingual technical support, unlimited access to KnowledgeBase and on-line training, 20% discount on all in-person or on-site training programs, priority access to the used equipment list, and monthly only discounts on select products and enhancements
GOLD-DTX-FIBER/MMD	**DTX Fiber Module Gold Support** – As above

* Available in 120V and International (220-240V) versions. 120V version includes English users manual. International version includes multi-language pack users manual.
* Kit includes up to one pair of interface adapters and one pair of personality modules per user

[pdf] User Manual Specifications

2032360 OptiFiber Specs POD qxd DTX CableAnalyzer Ordering Information 1 Available in 120V and International 120 240V versions version includes English users manual multi language pack 2 This up to one pair of interface adapters personality modules per year Model Name Product Description 18001 1800 Includes Main Smart Remote LinkWare PC Software FLUKEDTX1200 82fai3h5wg8220a0l3ilfiz1 wpengine netdna ssl 2015 12

DTX CableAnalyzerTM Ordering Information Model Name DTX-18001 DTX-12001 DTX-LT1 DTX-MFM DTX-SFM DTX ... DTX Multimode Fiber Modules Includes two modules one for Main and one for Smart Remote, 850nm and **1300**nm LED sources combined into single output port, 850/**1300**/1310/1550 nm power meter, and integrat...

lang:en score:14 filesize: 52.14 K page_count: 3 document date: 2004-07-09

[pdf] Datasheet Guide Accessories

Fluke Networks NFA LC Adapters for DTX xFM2 Datasheet fluke networks nfa lc copper certification and testing datasheet itm product adapters dtx xfm2 Charger Carrying Case Smart Remotes 1800 SR Remote TERA Adapter Kit includes Channel set of two TERA srsltid AfmBOorlGXwDal54L DzRhkKxdZkKbqqB3 2RtGUhPSR8xpEwg s cache 2RtGUhPSR8xpEwgUnKCM |||

NETWORKSUPER DTX CableAnalyzerTM Accessories Guide See how Fluke Networks options and accessories ... DTX-MFM2 Set of two DTX Multimode Fiber Modules Series 2. Each module is equipped with 850 nm and **1300** nm LED light sources combined into a single output port 850/**1300**/1310/1550 nm optical power met...

lang:en score:14 filesize: 5.09 M page_count: 16 document date: 2015-03-13

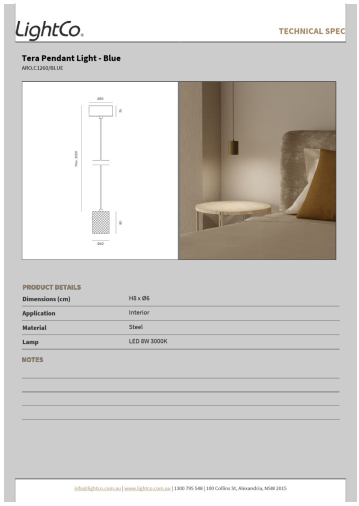

[pdf] Datasheet Dimension Guide

DATASHEETAromas Tera Interior Pendants 3000K Blue Matte Black Brass 8W ARO C1260 Eco Smart Lightingtera pendant light bluecdn shopify s files 1 0343 0157 5303 tera blue v 1735796034 |||

Tera Pendant Light - Blue ARO.C1260/BLUE TECHNICAL SPEC PRODUCT DETAILS Dimensions cm Application Material Lamp NOTES H8 x 6 Interior Steel LED 8W 3000K info lightco.com.au www.lightco.com.au **1300** 795 548 100 Collins St, Alexandria, NSW 2015 ...

lang:en score:14 filesize: 330.61 K page_count: 1 document date: 2025-01-02

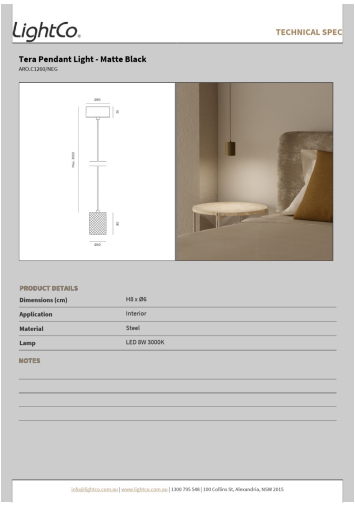

[pdf] Datasheet Dimension Guide

DATASHEETAromas Tera Interior Pendants 3000K Blue Matte Black Brass 8W ARO C1260 Eco Smart Lightingtera pendant light matte blackcdn shopify s files 1 0343 0157 5303 tera black v 1735796033 |||

Tera Pendant Light - Matte Black ARO.C1260/NEG TECHNICAL SPEC PRODUCT DETAILS Dimensions cm Application Material Lamp NOTES H8 x 6 Interior Steel LED 8W 3000K info lightco.com.au www.lightco.com.au **1300** 795 548 100 Collins St, Alexandria, NSW 2015 ...

lang:en score:14 filesize: 330.63 K page_count: 1 document date: 2025-01-02

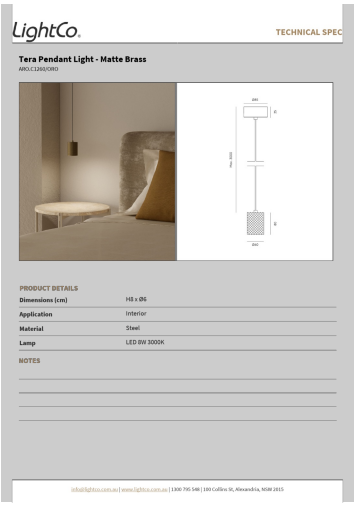

[pdf] Datasheet Dimension Guide

DATASHEETAromas Tera Interior Pendants 3000K Blue Matte Black Brass 8W ARO C1260 Eco Smart Lightingtera pendant light matte brasscdn shopify s files 1 0343 0157 5303 tera brass v 1735796033 |||

Tera Pendant Light - Matte Brass ARO.C1260/ORO TECHNICAL SPEC PRODUCT DETAILS Dimensions cm Application Material Lamp NOTES H8 x 6 Interior Steel LED 8W 3000K info lightco.com.au www.lightco.com.au **1300** 795 548 100 Collins St, Alexandria, NSW 2015 ...

lang:en score:14 filesize: 330.63 K page_count: 1 document date: 2025-01-02

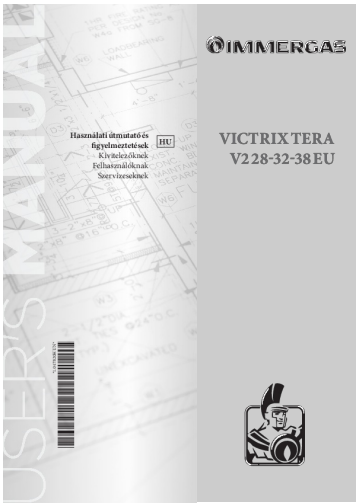

[pdf]

Victrix Tera V2 28 32 38 EU 1047820 000 HUN tusken HUN1 Immergas VICTRIX TERA kazanpont hu dokumentumok |||

1.047820HUN / Hasznlati tmutat s figyelmeztetsek HU Kivitelezknek Felhasznlknak Szervizese ... D V6 20 B 10 60 50 40 Y2 30 20 10 0 0 0 100 200 300 400 500 600 700 800 900 1000 1100 1200 **1300** 1400 1500 1600 1700 1800 X1 34 Victrix Tera V2 32 EU 80 80 70 70 A V9 60 60 C D 50...

lang:hu score:14 filesize: 13.31 M page_count: 108 document date: 2022-12-06

[pdf] Catalog

VICTRIX TERA V2 Distance between thermostat and gateway max 10 mt** Power supply 2 batteries standard Operating ambient temperature 0 40 ° C catalogue immergas media Prodotto 640067905902cae16ba70f8a |||

CONDENSING NEW NEW NEW NE NEW N W VICTRIX TERA V2 EW NEW Wall-hung combi and heating only cond ... D 30 30 20 Speed 6 20 B 10 10 0 0 0 100 200 300 400 500 600 700 800 900 1000 1100 1200 **1300** 1400 1500 1600 1700 1800 Flow rate l/h Circulator pump absorbed power W Head kPa Flow...

lang:en score:14 filesize: 2.45 M page_count: 20 document date: 2023-04-26

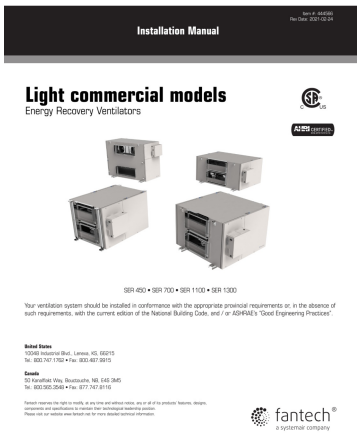

[pdf] User Manual Instructions Specifications Catalog

Light commercial modelsFantech SER450 IOMhvacquick catalog files Fantech IOM srsltid AfmBOorAZb7B6SNl12QxJGUVViMgYYPuXKMi 8ajSGSol O 5BxTF9P modelsLight IOMFantech 5BxTF9Phvacquick AfmBOooDo5n2 r v5Mjcwuy2yycRES72ZoYjoFTPCKw9 pcmZVhTD7Na ||| |||

Installation Manual Light commercial models Energy Recovery Ventilators Item #: 444566 Rev Date: 2021-02-24 SER 450 SER 700 SER 1100 SER 1300 Your ventilation system should be installed in conformance with the appropriate provincial require

Installation Manual Light commercial models Energy Recovery Ventilators Item #: 444566 Rev Date: 2021-02-24 SER 450 SER 700 SER 1100 SER **1300** Your ventilation system should be installed in conformance with the appropriate provincial requirements or, in the absence of such requirements,...

lang:en score:13 filesize: 5.41 M page_count: 48 document date: 2023-11-16