Saved from manuals.plus.
Open the live page for links to other documents and user manuals.

Gardena 3800 Silent

Gardena Pressure Tank Unit 3800 Silent Instruction Manual

Model: 3800 Silent (09064-20)

1. Product Overview

The Gardena Pressure Tank Unit 3800 Silent is designed for reliable and quiet supply of raw water for domestic use and garden irrigation. This unit efficiently draws water from sources such as wells or cisterns, distributing it throughout your home and garden.

Key features include an innovative, quiet pumping technology, a 21-liter pressure tank, an integrated pressure indicator, and a self-priming capability up to 8 meters depth, secured by a non-return valve. Its durable construction features a ceramic seal and a double sealing system, ensuring a long lifespan. The special membrane in the pressurized tank requires no maintenance for at least 5 years, eliminating the need for air addition or membrane replacement. The noise-reducing casing ensures exceptionally quiet operation.



Image 1.1: The Gardena Pressure Tank Unit 3800 Silent, showcasing its compact design and integrated pressure gauge.

2. Safety Instructions

Always read and understand all safety warnings and instructions before installing or operating the unit. Failure to follow these instructions may result in electric shock, fire, and/or serious injury.

- Ensure the power supply matches the voltage specified on the unit's rating plate.
- Do not operate the pump with flammable liquids or in explosive atmospheres.
- Protect the unit from frost. Drain the pump completely before freezing temperatures.
- Always disconnect the power supply before performing any maintenance or cleaning.
- Keep children and unauthorized persons away from the operating unit.

3. Setup and Installation

Proper installation is crucial for the optimal performance and longevity of your Gardena Pressure Tank Unit.

3.1 Placement

Place the unit on a stable, level surface, preferably indoors or in a protected area to shield it from weather elements. Ensure adequate ventilation around the unit.



Image 3.1: The pressure tank unit installed in a utility room, connected to the household water system.

3.2 Securing the Unit

For enhanced stability and to minimize vibration, the unit can be secured to its mounting surface using appropriate fasteners.



Image 3.2: A person tightening a bolt to secure the base of the pump unit to a shelf.

3.3 Water Connections

Connect the suction hose from your water source (well, cistern) to the inlet port of the pump. Connect the pressure hose from the pump's outlet port to your domestic water system or garden irrigation lines. Ensure all connections are tight and leak-free.



Image 3.3: Detailed view of the inlet and outlet pipe connections on the Gardena pump unit.

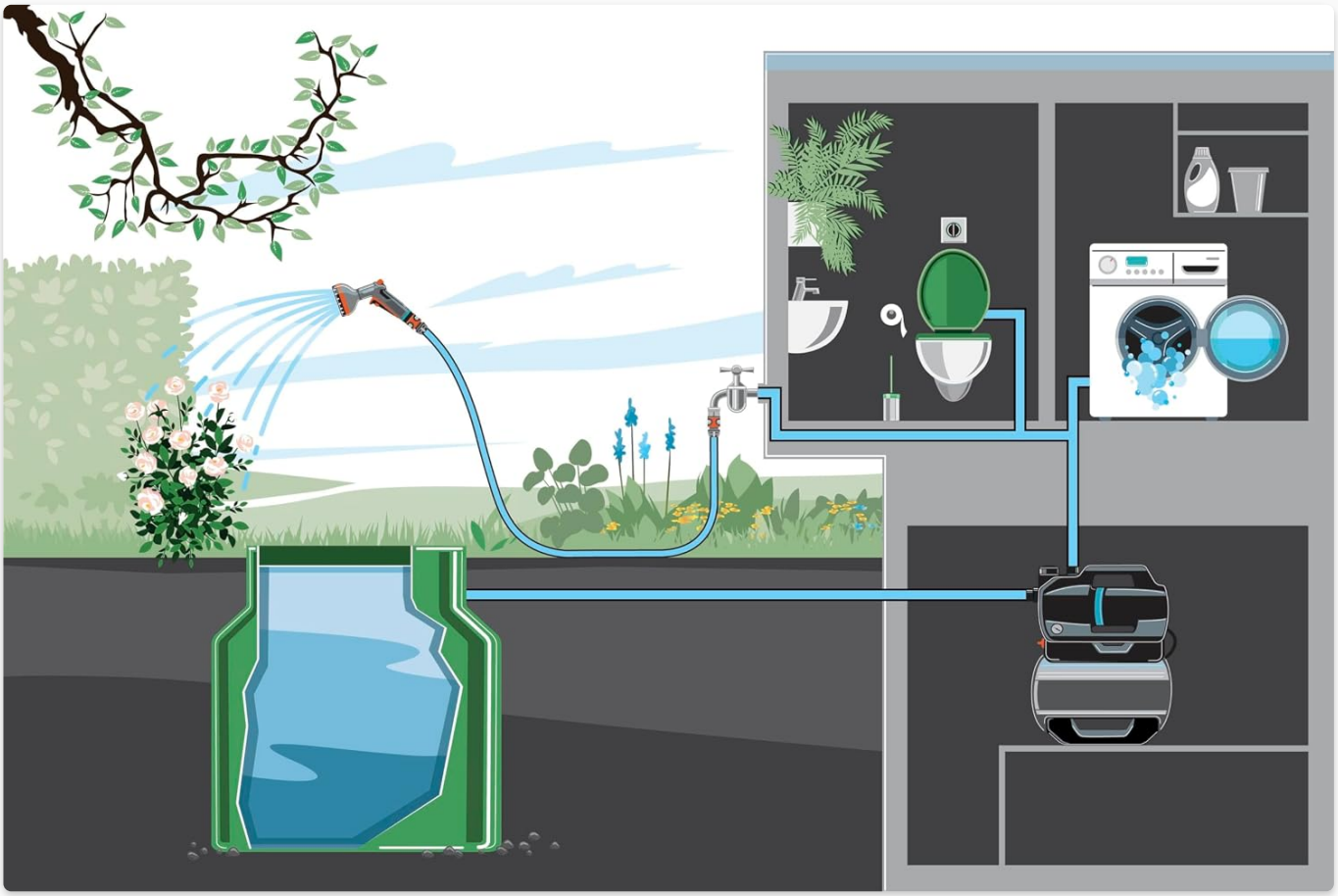

Image 3.4: Illustrative diagram showing the water flow from an external source (cistern) through the pump to household appliances and garden irrigation.

3.4 Priming the Pump

Before initial operation, the pump must be primed. Open the filling cap and pour water into the pump housing until it is completely filled. Close the cap securely. This step is essential for the pump to establish suction.



Image 3.5: A person pouring water into the pump's filling port to prime the unit before operation.

4. Operating Instructions

Once installed and primed, the Gardena Pressure Tank Unit 3800 Silent operates largely automatically.

4.1 Initial Start-up

1. Ensure all connections are secure and the pump is primed.
2. Plug the power cord into a suitable electrical outlet.
3. The pump will automatically start and build pressure in the tank.
4. Monitor the integrated pressure indicator to ensure pressure builds correctly.

4.2 Automatic Operation

The unit is designed for automatic operation. When water is drawn from the system (e.g., opening a tap, flushing a toilet), the pressure in the tank drops. Once it reaches a pre-set minimum, the pump automatically activates to refill the tank and restore pressure. When the maximum pressure is reached, the pump switches off. This ensures energy efficiency and quiet operation.

4.3 Monitoring Pressure

The integrated pressure indicator allows for easy monitoring of the system's pressure status. Refer to the specifications for optimal operating pressure ranges.

5. Maintenance

Regular maintenance ensures the long-term performance and reliability of your pressure tank unit.

5.1 Draining the Pump

Before periods of inactivity or when there is a risk of frost, the pump should be completely drained. Locate the water drain screw, place a container underneath, and open the screw to allow all water to exit the pump. Close the screw securely once drained.

5.2 Filter Cleaning

The unit includes a fine filter to protect against impurities. Periodically inspect and clean this filter to prevent blockages and maintain optimal flow. Refer to the manufacturer's guidelines for filter access and cleaning procedures.

5.3 Tank Maintenance

Thanks to its special membrane, the pressurized tank requires no maintenance for at least 5 years. There is no need to add air or replace the membrane during this period.

6. Troubleshooting

This section addresses common issues you might encounter with your pressure tank unit.

- **Pump does not start:** Check power connection, ensure the unit is plugged in, and verify the circuit breaker. Ensure the pump is primed.
- **Pump runs continuously or cycles frequently:** Check for leaks in the suction or pressure lines. Ensure the non-return valve is functioning correctly. The pressure tank might need inspection if the issue persists (though the membrane is low-maintenance).
- **Low pressure or flow:** Check for blockages in the suction filter or hoses. Ensure the water source has sufficient water. Verify that all valves are fully open.
- **Unusual noise or vibration:** Ensure the pump is securely mounted. Check for air in the system (re-prime if necessary). Inspect for any foreign objects in the pump housing (after disconnecting power).
- **Overheating:** Ensure adequate ventilation around the pump. Check for prolonged dry running or excessive load. Disconnect power and allow to cool before restarting.

If problems persist, consult a qualified technician or contact Gardena customer support.

7. Specifications

Feature	Specification
Brand	Gardena
Model Number	09064-20
Dimensions (L x W x H)	53.7 x 28.5 x 58 cm
Weight	16 Kilograms

Feature	Specification
Material	Polypropylene (PP)
Power Source	Electric, AC
Max Flow Rate	3800 Litres per hour
Max Lift Height	39 Meters
Self-priming Depth	Up to 8 Meters
Tank Capacity	21 Liters (approx.)

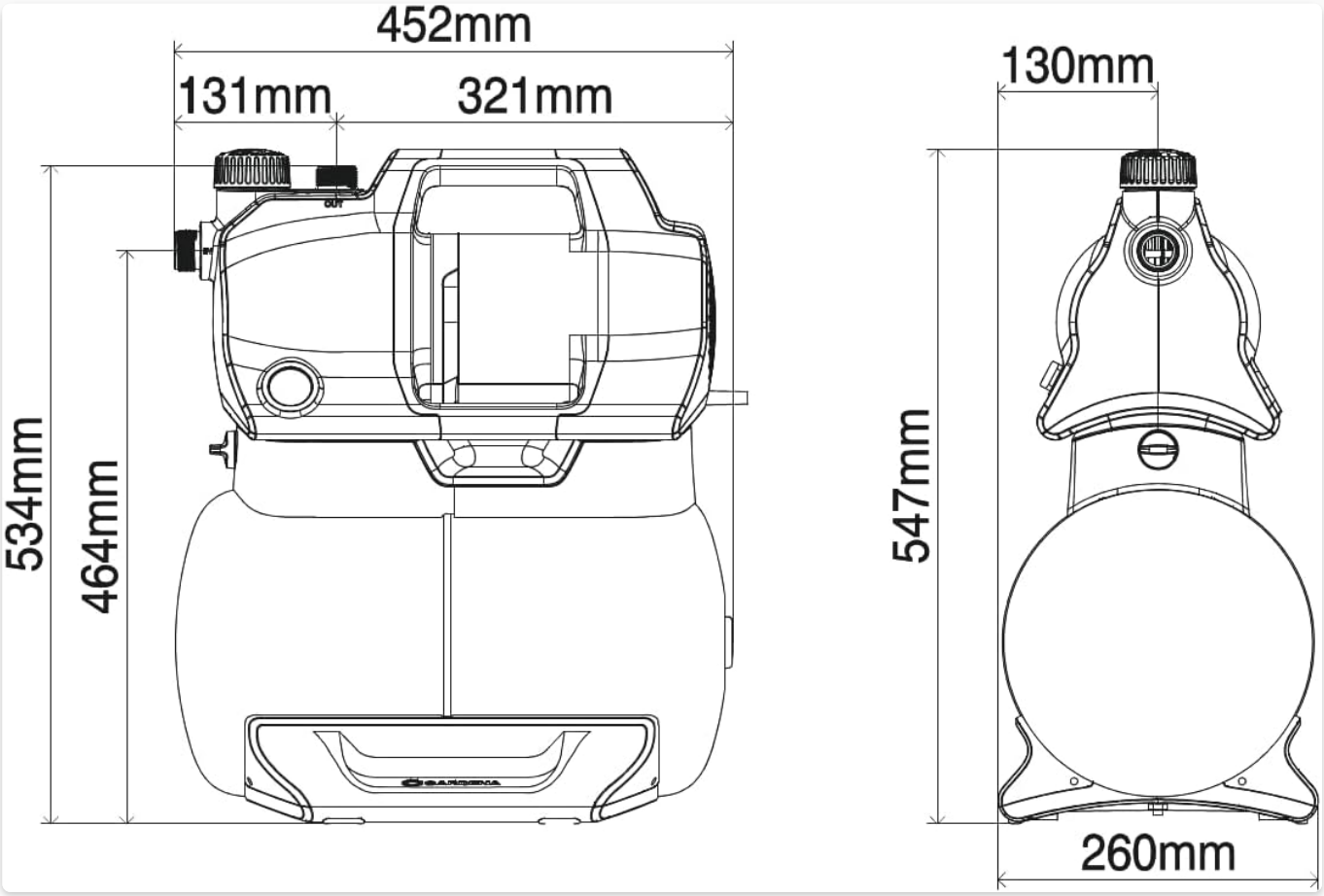

Image 7.1: Performance chart illustrating the relationship between maximum flow rate and lift height, along with self-priming depth.

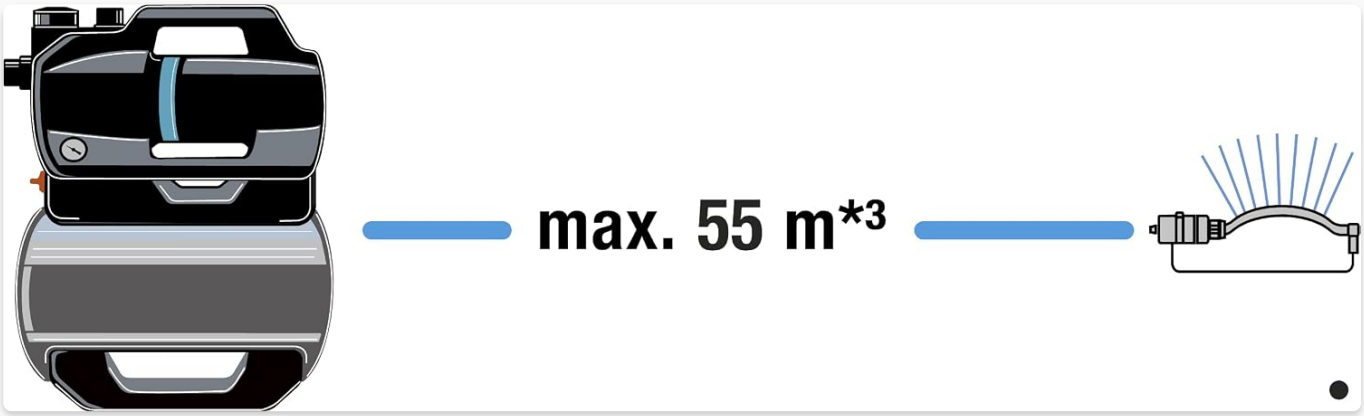

Image 7.2: Diagram indicating a maximum irrigation distance of 55 meters from the pump to a sprinkler.

8. Parts Availability and Support

Gardena ensures the availability of spare parts for this unit for a period of 5 years from the date of purchase.
For further assistance, technical support, or to inquire about spare parts, please refer to the official Gardena website or contact your local Gardena service center. Always provide the model number (09064-20) and serial number (if applicable) when seeking support.

© 2025 Gardena. All rights reserved. Information subject to change without notice.

Ask a question about this manual

Ask about setup, troubleshooting, compatibility, parts, safety, or missing instructions. Manuals+ will review the question and use this page's manual context to help answer it.

Name

Anonymous

Email

you@example.com

After a successful submission, we securely hash the supplied account or form email before sending it to Microsoft Advertising for conversion attribution. Privacy details.

Question

Example: How do I reset this device or fix this error?

Details

Model number, symptoms, what you tried, or the section of the manual you are using.

Submit question

Open the live page

https://manuals.plus/asin/B0BNLNCD9T

More documents and user manuals: **https://manuals.plus/**