Saved from manuals.plus.
Open the live page for links to other documents and user manuals.

LeMotech lm201709071397_b

LeMotech IP67 Waterproof Junction Box Instruction Manual

Model: lm201709071397_b

Product Overview

The LeMotech IP67 Waterproof Junction Box is a robust and versatile enclosure designed to protect electrical and electronic components from dust and water. Constructed from durable ABS plastic, it is suitable for various indoor and outdoor applications, including DIY projects, industrial installations, and outdoor wiring.



Image: The LeMotech IP67 Waterproof Junction Box, shown with its lid and four accompanying plastic screws.

Key Features

- **IP67 Waterproof Rating:** Provides complete protection against dust ingress and temporary immersion in water up to 1 meter for 30 minutes.
- **Durable ABS Plastic Construction:** Offers excellent resistance to impact, corrosion, and UV radiation, ensuring long-lasting performance in harsh environments.
- **Dustproof Design:** Effectively seals out dust and debris, maintaining the integrity of enclosed components.
- **Non-Rusty Plastic Screws:** Professional plastic screws prevent rust and ensure a secure, fall-off preventing closure.
- **Internal Copper Terminals:** Features copper terminals for convenient and reliable wiring connections.
- **Fixed Installation Holes:** Pre-drilled holes at the bottom facilitate easy and secure mounting.
- **Adhesive Seal Gasket:** Ensures good elasticity and durability, preventing water and dirt ingress.



Image: Detailed view highlighting key features such as the ABS plastic screw, threaded insert stud for easy installation, and the potting seal for enhanced waterproofing.



Image: Visual representation of the junction box's protective qualities, including IP67 water resistance, dustproof capabilities, impact resistance, and corrosion resistance.

Package Contents

The LeMotech IP67 Waterproof Junction Box package includes:

- 1 x LeMotech IP67 Waterproof Junction Box
- 4 x Plastic Screws for Lid



Image: The complete package contents, showing the main junction box unit and the four plastic screws used for securing the lid.

SPECIFICATIONS

Attribute	Detail
Product Name	Junction Box
Waterproof Rating	IP67
Qualification	CE
Material	ABS Plastic
Main Color	Gray
Net Weight	190g
Outer Size (L*W*H)	3.9" x 3.9" x 3" (100 x 100 x 75mm)

Inner Size (Approx. L*W*H)	3.7" x 3.7" x 2.8" (94 x 94 x 70mm)
Screw Thread Diameter	0.4" (10mm)
Model Number	lm201709071397_b

Note: Allowable error for dimensions is ±2mm.

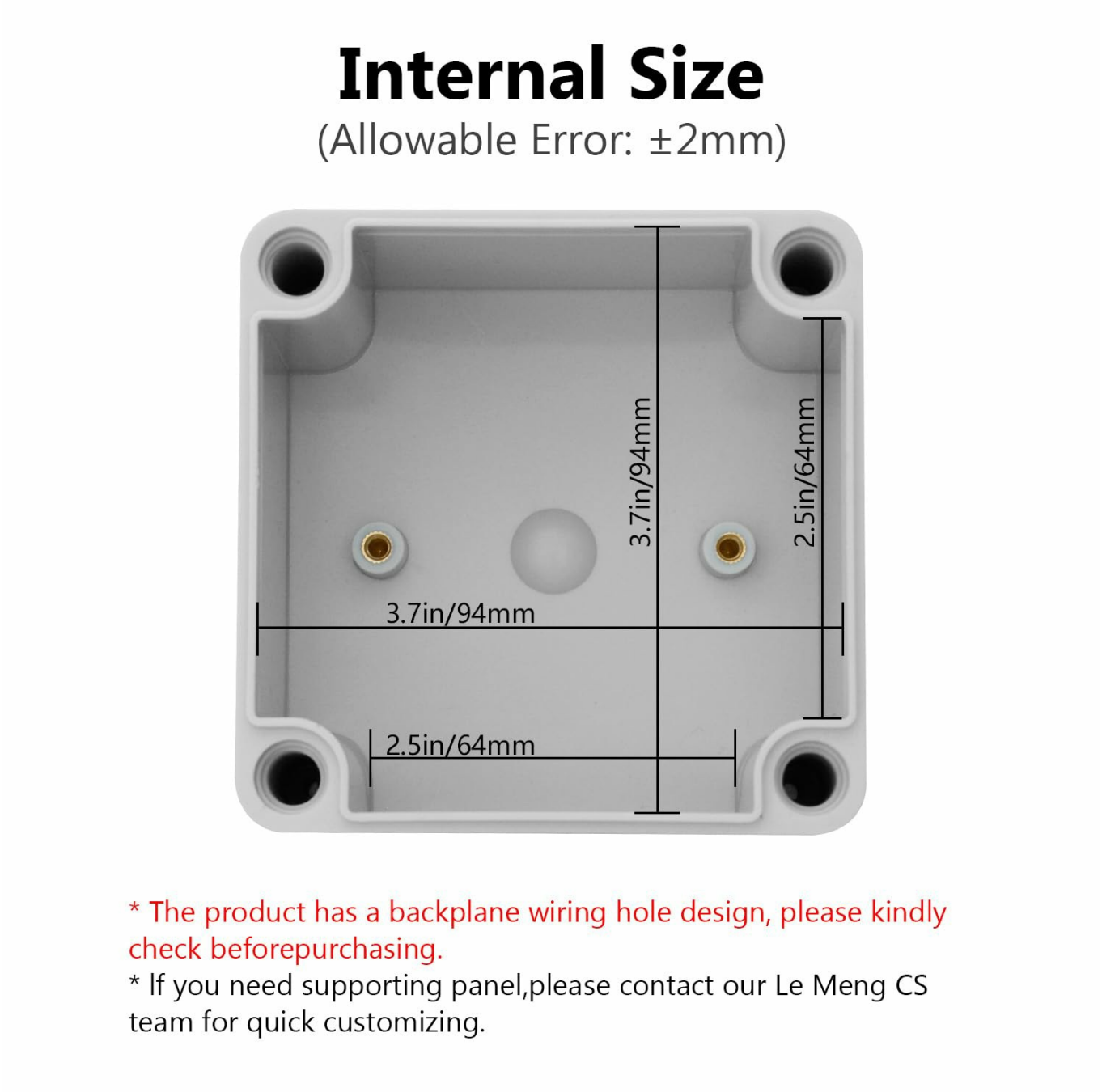

Image: Diagram illustrating the outer dimensions of the junction box, measuring 3.94 inches (100mm) in length and width, and 2.95 inches (75mm) in height.

Internal Height

(Allowable Error: ±2mm)

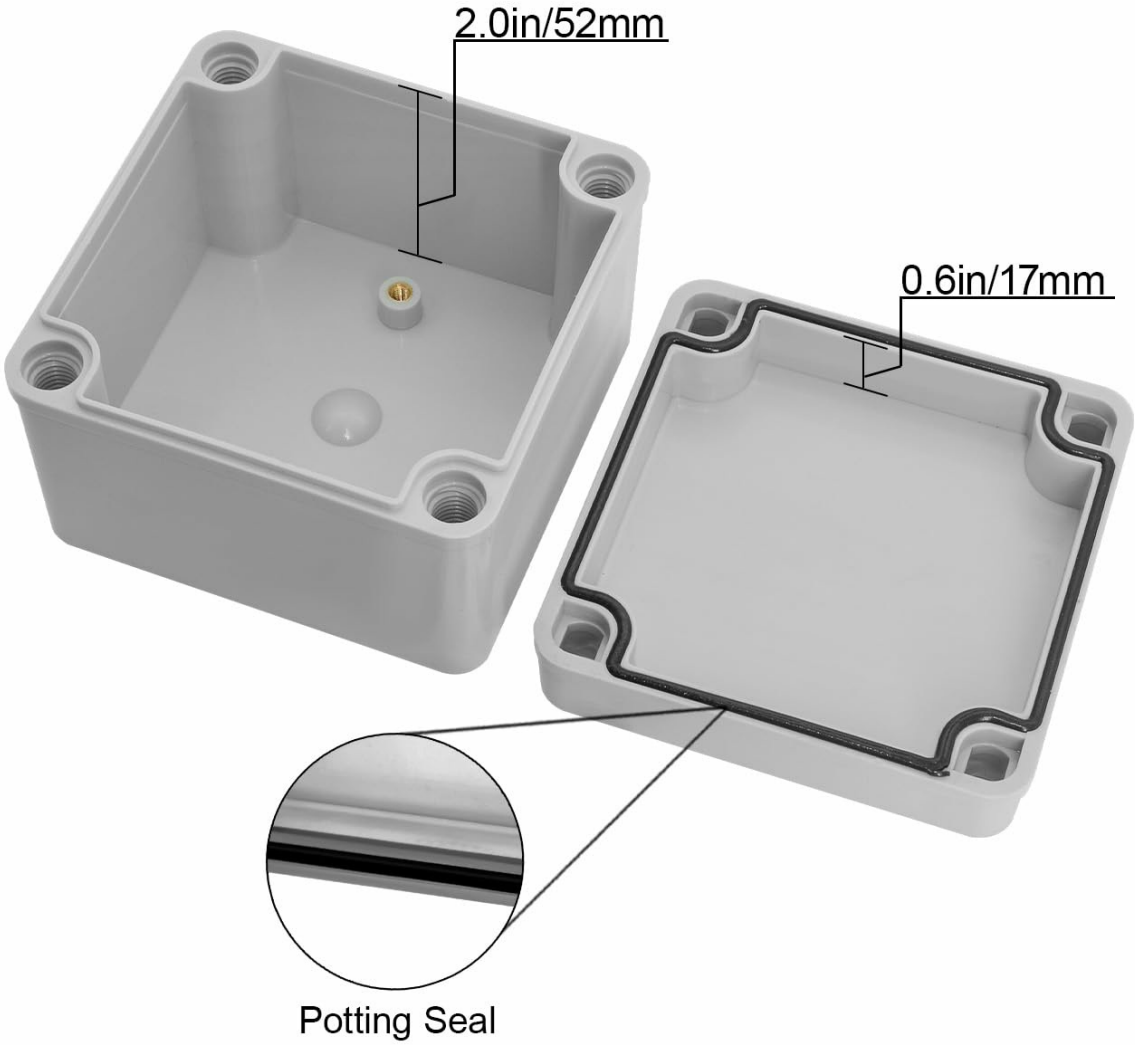

Image: Diagram illustrating the internal dimensions of the junction box, showing approximate measurements for component placement.

Rear View



Image: Diagram detailing the internal height of the junction box and a close-up of the potting seal, crucial for its waterproof integrity.

Dimension

(Allowable Error: ±2mm)

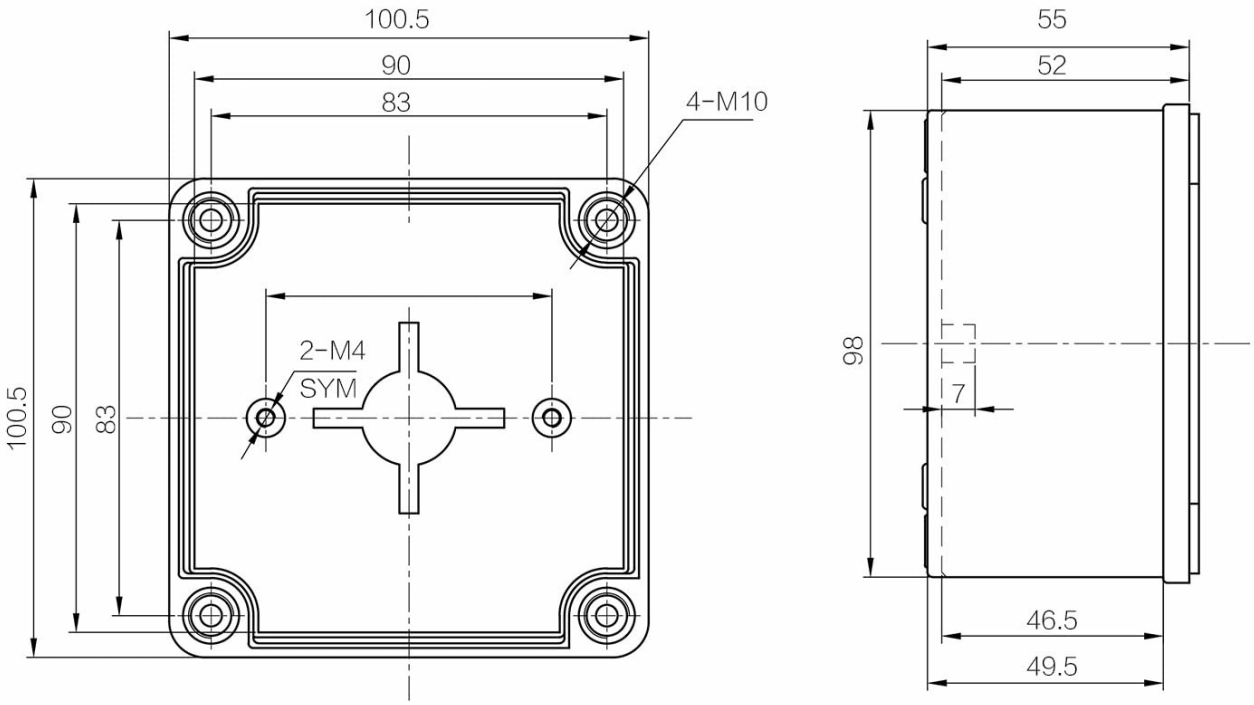

Size(WxLxH):100x100x75(mm)

Image: Rear view of the LeMotech junction box, showing the mounting points and overall structure from the back.

Setup and Installation

The LeMotech IP67 Waterproof Junction Box is designed for straightforward installation. Follow these steps for optimal performance and protection:

1. **Prepare the Mounting Surface:** Ensure the surface where the junction box will be mounted is clean, dry, and stable.
2. **Mark Drilling Points:** Use the fixed installation holes at the bottom of the box as a template to mark the drilling points on your mounting surface.
3. **Drill Pilot Holes:** Drill appropriate pilot holes at the marked locations.
4. **Secure the Box:** Use suitable screws (not included, unless for lid) to firmly attach the junction box to the mounting surface. The box features internal threaded inserts for secure fastening.
5. **Internal Wiring:** Route your electrical or electronic components and wiring inside the box. Utilize the copper terminals and backplane wiring hole design for convenient connections.

6. **Seal the Lid:** Place the lid onto the box, ensuring the adhesive seal gasket is properly seated to prevent water and dust ingress.
7. **Fasten the Lid Screws:** Use the provided plastic screws to secure the lid. Tighten them evenly to ensure a tight seal.

Note: For detailed internal dimensions and wiring hole design, refer to the specification diagrams.

Your browser does not support the video tag.

Video: This video demonstrates the features and assembly of the LeMotech IP67 Waterproof Dustproof Junction Box, including its fall-off preventing screw design, ABS plastic material, copper terminals, fixed installation holes, and adhesive seal gasket, concluding with a waterproof test.

Operation

Once installed, the LeMotech IP67 Waterproof Junction Box operates passively by providing a protective enclosure for your electrical and electronic components. Ensure all connections inside are secure and the lid is properly sealed to maintain its IP67 rating.

The box is designed for continuous outdoor and indoor use, offering reliable protection against environmental factors.

Maintenance

The LeMotech IP67 Waterproof Junction Box requires minimal maintenance due to its durable construction.

- **Regular Inspection:** Periodically inspect the box for any signs of physical damage, cracks, or loose screws.
- **Seal Check:** Ensure the lid's adhesive seal gasket remains intact and free from debris. Clean the gasket if necessary to maintain its sealing effectiveness.
- **Cleaning:** Clean the exterior of the box with a damp cloth. Avoid using harsh chemicals or abrasive materials that could damage the ABS plastic.
- **Screw Tightness:** Occasionally check and re-tighten the lid screws if they appear loose, ensuring the waterproof seal is maintained.

Troubleshooting

Most issues with the junction box relate to improper installation or damage.

Problem	Possible Cause	Solution
Water or Dust Inside Box	Lid not properly sealed; damaged gasket; loose screws.	Ensure lid is correctly aligned and screws are tightened evenly. Inspect gasket for damage and replace if necessary.
Lid Difficult to Close/Open	Misalignment; debris in seal; overtightened screws.	Check alignment of lid and box. Clean any debris from the seal. Loosen screws slightly if overtightened.
Box Not Securely Mounted	Improper screws; insufficient tightening; unstable mounting surface.	Use appropriate screws for the mounting surface. Ensure screws are tightened firmly. Reinforce mounting surface if unstable.

Warranty and Support

For warranty information or technical support regarding your LeMotech IP67 Waterproof Junction Box, please refer to

the official LeMotech website or contact their customer service.

Visit the official LeMotech Store for more products and information:LeMotech Store.

© 2025 LeMotech. All rights reserved.

Ask a question about this manual

Ask about setup, troubleshooting, compatibility, parts, safety, or missing instructions. Manuals+ will review the question and use this page's manual context to help answer it.

Name

Anonymous

Email

you@example.com

After a successful submission, we securely hash the supplied account or form email before sending it to Microsoft Advertising for conversion attribution. Privacy details.

Question

Example: How do I reset this device or fix this error?

Details

Model number, symptoms, what you tried, or the section of the manual you are using.

Submit question

Open the live page

https://manuals.plus/asin/B0BKGG7TT8

More documents and user manuals: **https://manuals.plus/**