Saved from manuals.plus.
Open the live page for links to other documents and user manuals.

Smart Tech 32HN10T3

Smart Tech 32HN10T3 Full HD LED TV User Manual

Model: 32HN10T3

1. Introduction

This manual provides essential information for the safe and efficient use of your Smart Tech 32HN10T3 Full HD LED TV. Please read these instructions carefully before operating the device and retain them for future reference. This television features a 32-inch (80cm) HD LED display, a Triple Tuner for various reception types, Dolby Audio, H.265 support, and multiple connectivity options including HDMI and USB.

2. Safety Information

Always observe the following safety precautions to prevent electric shock, fire, or injury:

- Do not expose the TV to rain or moisture.
- Do not open the TV casing; refer all servicing to qualified personnel.
- Ensure proper ventilation around the TV.
- Unplug the TV during lightning storms or when unused for long periods.
- Keep batteries away from children and dispose of them properly.

3. What's in the Box

Carefully unpack your television and check that all the following items are included:

- Smart Tech 32HN10T3 LED TV
- Remote Control (with 2 AAA batteries)
- Power Cable
- Stand/Bracket components
- User Manual (this document)

4. Setup

4.1 Attaching the Stand

To attach the stand to your TV:

1. Place the TV face down on a soft, flat surface to prevent screen damage.
2. Align the stand with the mounting holes on the bottom of the TV.
3. Secure the stand using the provided screws.



Image 1: Front view of the Smart Tech 32HN10T3 LED TV with stand.

4.2 Connecting External Devices

Your TV offers various connection ports for external devices. Refer to the back panel diagram below:

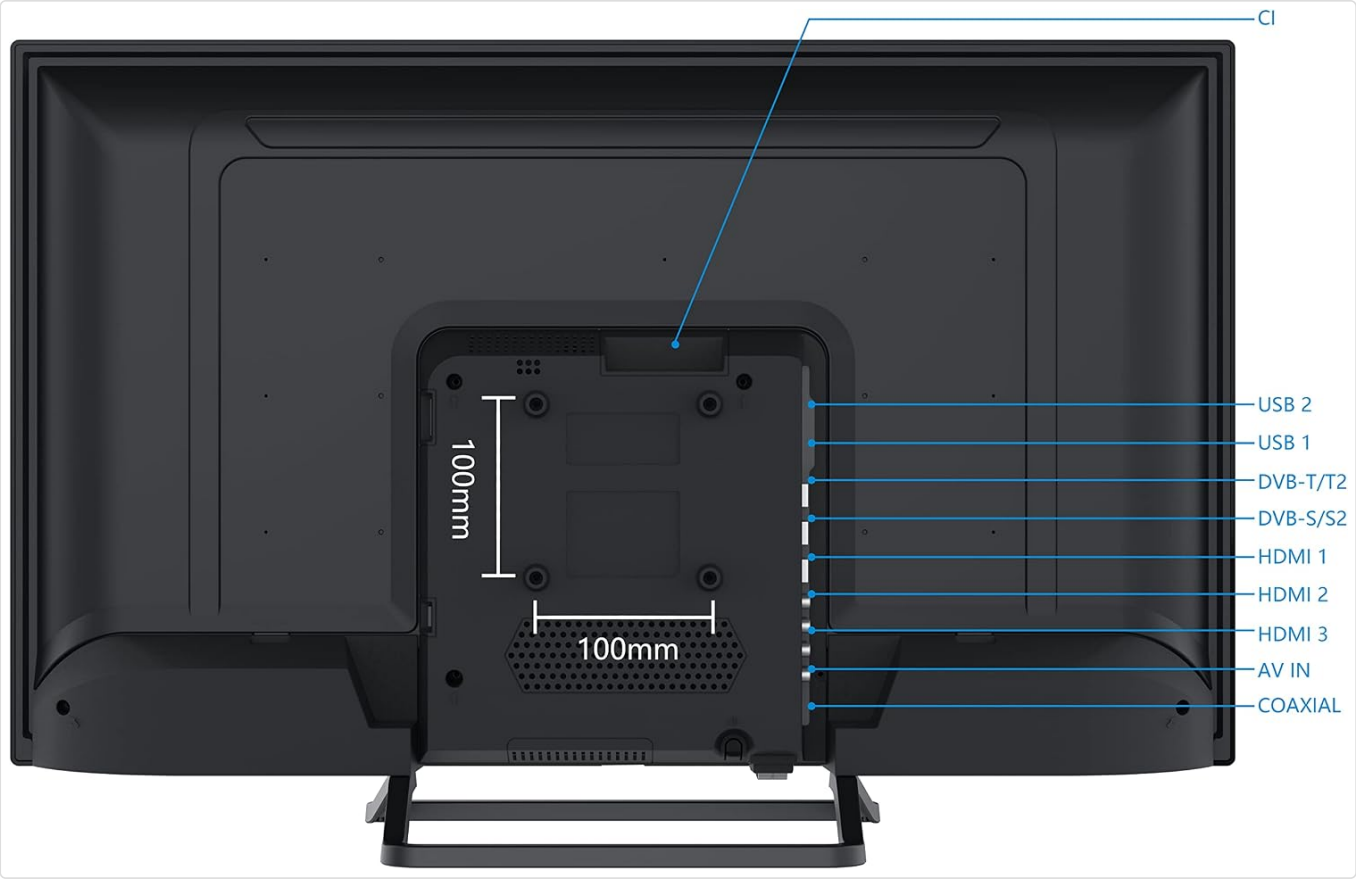

Image 2: Back panel connections of the Smart Tech 32HN10T3 TV. Ports include USB 1, USB 2, DVB-T/T2, DVB-S/S2, HDMI 1, HDMI 2, HDMI 3, AV IN, and COAXIAL. VESA mounting points are also visible (100mm x 100mm).

- **Power:** Connect the power cable to the TV's power input and then to a wall outlet.
- **HDMI:** Use HDMI ports (HDMI 1, HDMI 2, HDMI 3) to connect devices like Blu-ray players, game consoles, or satellite receivers.
- **USB:** Insert USB storage devices into the USB ports (USB 1, USB 2) to play media files.
- **Antenna/Satellite:** Connect your antenna cable to the DVB-T/T2 port or satellite dish cable to the DVB-S/S2 port for digital terrestrial or satellite broadcasting.
- **CI+:** Insert a CI+ module (Conditional Access Module) into the CI+ slot for encrypted channels.
- **AV IN:** Use the AV IN port for older devices with composite video and stereo audio outputs.
- **COAXIAL:** Connect to an external audio system for digital audio output.

4.3 First-Time Setup

Upon first power-on, the TV will guide you through an initial setup process. This typically includes:

- Language selection
- Country selection
- Channel scanning (DVB-T/T2, DVB-S/S2, DVB-C)
- Time zone settings

5. Operating the TV

5.1 Remote Control Overview

The remote control allows you to access all TV functions. Ensure the included AAA batteries are correctly inserted.



Image 3: Smart Tech 32HN10T3 TV dimensions (732mm width, 475mm height with stand, 225mm depth with stand) and the included remote control.

5.2 Basic Functions

- **Power:** Press the power button to turn the TV on or off.
- **Volume:** Use the VOL +/- buttons to adjust the volume.
- **Channel:** Use the CH +/- buttons to change channels.
- **Input Source:** Press the SOURCE button to select between HDMI, AV, TV, and USB inputs.
- **Menu:** Press the MENU button to access the main settings menu. Use arrow keys to navigate and OK to confirm.

5.3 USB Media Playback

To play media from a USB device:

1. Insert your USB stick into one of the TV's USB ports.
2. Select the USB input source using the SOURCE button.
3. Navigate through the folders and select the desired media file (photos, music, videos) to play.

5.4 Hotel Mode / Store Mode

These modes are typically used in commercial settings to restrict certain TV functions or reset settings after power cycling. Consult the advanced settings menu for options related to Hotel Mode or Store Mode if required.

6. Maintenance

6.1 Cleaning the TV

- Always unplug the TV before cleaning.
- Use a soft, dry cloth to wipe the screen and cabinet.
- For stubborn marks, lightly dampen the cloth with water or a mild, non-abrasive screen cleaner.
- Never spray cleaner directly onto the screen or TV cabinet.

6.2 Storage

If you need to store the TV for an extended period, ensure it is unplugged, clean, and stored in a dry, dust-free environment, preferably in its original packaging.

7. Troubleshooting

If you encounter issues with your TV, refer to the following common problems and solutions:

- **No Power:** Check if the power cable is securely connected to both the TV and the wall outlet. Ensure the outlet is functional.
- **No Picture/Sound:** Verify the correct input source is selected. Check all cable connections (HDMI, antenna, etc.). Try another channel or media source.
- **Remote Control Not Working:** Ensure batteries are correctly inserted and not depleted. Point the remote directly at the TV's IR sensor.
- **Poor Picture Quality:** Check antenna/cable connections. If using an external device, ensure its output resolution matches the TV's capabilities.
- **No Channels Found:** Perform a new channel scan in the TV's menu settings. Ensure your antenna or satellite dish is properly connected and aligned.

For persistent issues, please contact customer support.

8. Specifications

Detailed technical specifications for the Smart Tech 32HN10T3 LED TV:

Feature	Specification
Brand	Smart Tech
Model Number	32HN10T3
Screen Size	32 inches (80 cm)
Screen Technology	LED
Resolution	1366 x 768 (HD Ready)
Refresh Rate	60 Hz
Audio Technology	Dolby Audio
Tuners	DVB-T/T2 (Terrestrial), DVB-S/S2 (Satellite), DVB-C (Cable)
Video Codec Support	H.265
HDMI Ports	3
USB Ports	2

Feature	Specification
Other Connectivity	CI+, AV IN, Coaxial
VESA Standard	100 x 100 mm
Product Dimensions (with stand)	73.2 x 22.5 x 47.51 cm (W x D x H)
Product Weight	3.6 kg
Energy Efficiency Class	E
Power Consumption (SDR)	26 kWh/1000h

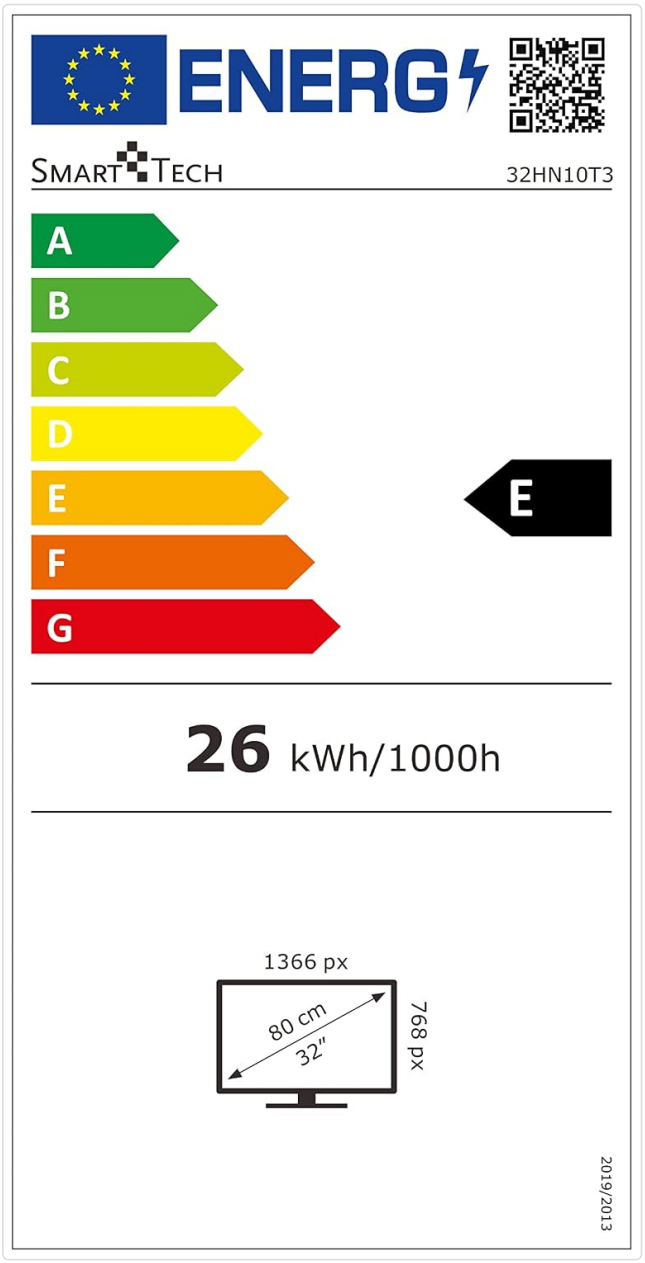

Image 4: Energy label for Smart Tech 32HN10T3, showing energy class E and 26 kWh/1000h consumption.

For more detailed product information, visit the EU EPREL database: https://eprel.ec.europa.europa.eu/qr/1232767

9. Warranty and Support

Warranty information for your Smart Tech 32HN10T3 TV is typically provided with the product packaging or can be found on the official Smart Tech website. Please retain your proof of purchase for warranty claims.

For technical support, service, or further inquiries, please refer to the contact information provided in your product documentation or visit the Smart Tech official support channels.

© 2023 Smart Tech. All rights reserved.

Ask a question about this manual

Ask about setup, troubleshooting, compatibility, parts, safety, or missing instructions. Manuals+ will review the question and use this page's manual context to help answer it.

Name

Anonymous

Email

you@example.com

After a successful submission, we securely hash the supplied account or form email before sending it to Microsoft Advertising for conversion attribution. Privacy details.

Question

Example: How do I reset this device or fix this error?

Details

Model number, symptoms, what you tried, or the section of the manual you are using.

Submit question

Open the live page

https://manuals.plus/asin/B0BJQMLZSK

More documents and user manuals: **https://manuals.plus/**