Saved from manuals.plus.
Open the live page for links to other documents and user manuals.

Bosch WGG04209FR

Bosch WGG04209FR Front-Load Washing Machine User Manual

Model: WGG04209FR | Brand: Bosch

1. Introduction

This manual provides essential information for the safe and efficient operation, installation, and maintenance of your Bosch WGG04209FR Series 4 front-load washing machine. Please read these instructions carefully before using the appliance for the first time and keep them for future reference.



Image 1: Front view of the Bosch WGG04209FR washing machine with the loading door open, revealing the stainless steel drum.

2. Safety Information

Always follow basic safety precautions when using electrical appliances to reduce the risk of fire, electric shock, and injury to persons. This appliance is intended for domestic use only.

- Ensure the appliance is properly installed and grounded by a qualified technician before use.
- Do not allow children to play on or in the appliance. Close supervision is necessary when the appliance is used near children.

- Never reach into the appliance while it is operating.
- Do not wash items that have been previously cleaned in, washed with, soaked in, or spotted with gasoline, dry-cleaning solvents, or other flammable or explosive substances.
- Unplug the appliance from the power supply before cleaning or performing any maintenance.
- Do not operate the appliance if it is damaged, malfunctioning, or has missing/broken parts.

3. Setup and Installation

3.1 Unpacking and Transport Bolt Removal

Before operating the washing machine, it is crucial to remove all transport bolts. Failure to do so can cause severe damage to the appliance and excessive vibration during operation.

1. Carefully remove all packaging materials.
2. Locate and remove the transport bolts at the rear of the machine. Refer to the installation guide for specific locations.
3. Insert the plastic caps provided into the holes.

3.2 Positioning and Leveling

Place the washing machine on a firm, level surface. Adjust the feet to ensure the appliance is perfectly level to prevent vibration and noise during operation.

3.3 Water and Drain Connection

Connect the water inlet hose to a cold water tap. Ensure the connections are tight to prevent leaks. Position the drain hose securely into a standpipe or laundry tub, ensuring it is not kinked.

3.4 Electrical Connection

Plug the power cord into a grounded electrical outlet. Ensure the voltage matches the appliance's requirements (240 Volts).

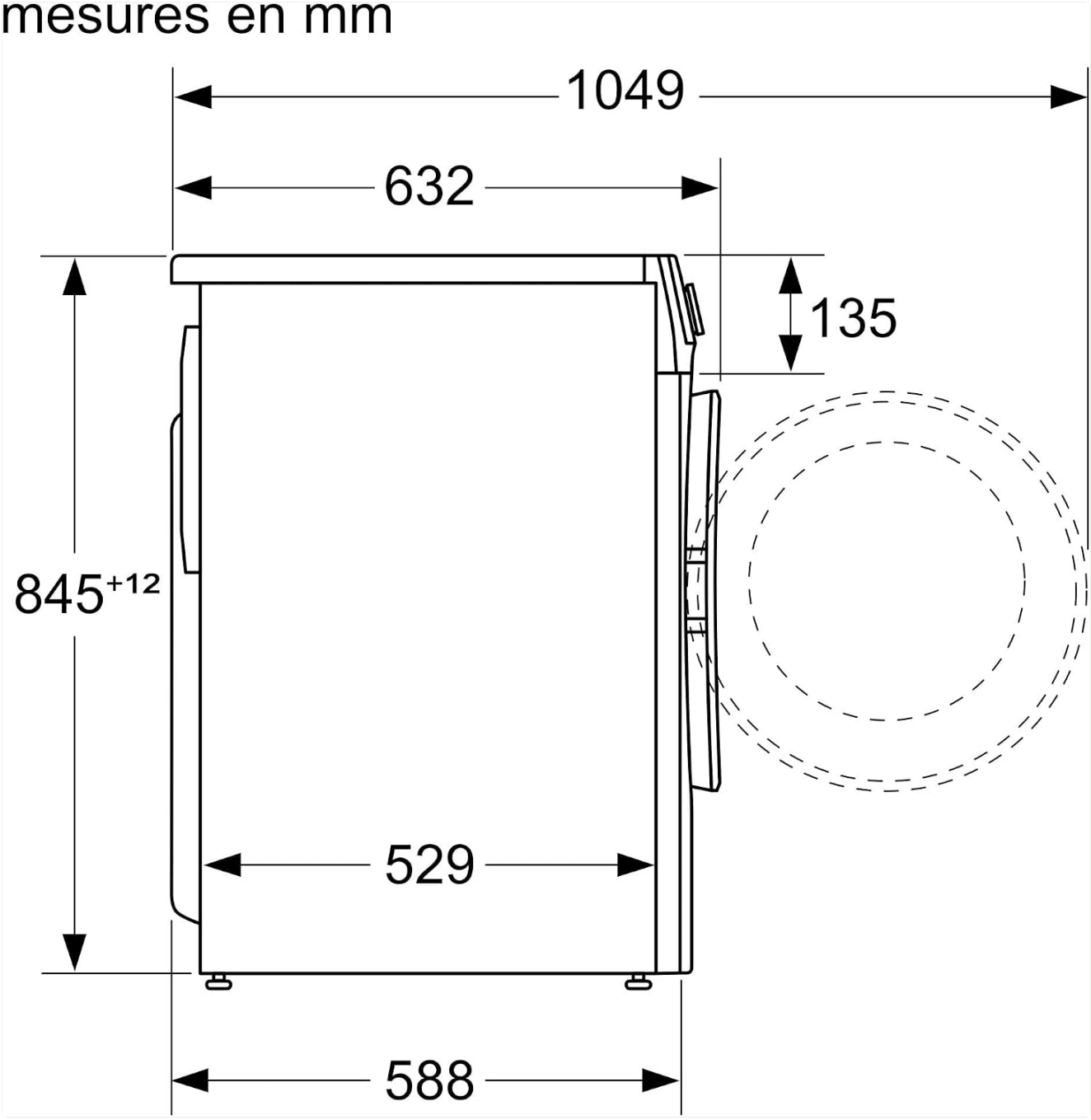

Image 2: Side dimension diagram (in mm) for installation planning.

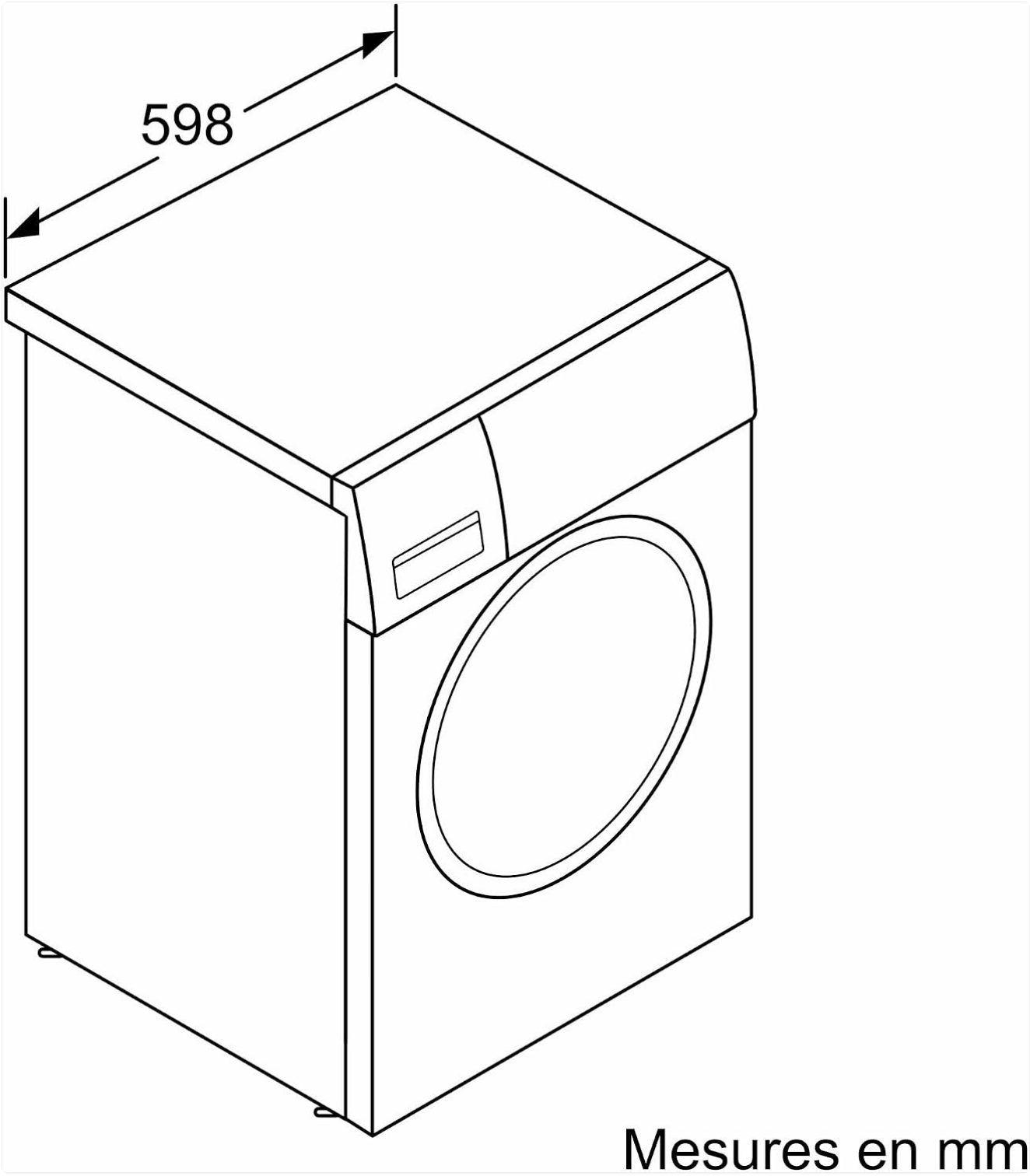

Image 3: Top and front dimension diagram (in mm) for installation planning.

4. Operating Instructions

4.1 Control Panel Overview



Image 4: The control panel features a central program dial, an LED display, and touch-sensitive buttons for various options.

4.2 Loading Laundry

Open the loading door and place laundry loosely into the drum. Do not overload the machine; ensure there is enough space for clothes to tumble freely. The maximum capacity is 9 kg.

4.3 Adding Detergent and Additives

Add the appropriate amount of detergent and any fabric softeners or other additives to the dispenser drawer. Consult your detergent packaging for recommended dosages based on load size and water hardness.

4.4 Program Selection

Turn the program dial to select the desired wash program. The LED display will show the estimated cycle time.

- **Eco 40-60:** Energy-efficient program for normally soiled cotton, linen, or mixed fiber items.
- **Cotton (cold - 90°C):** For durable cotton items.
- **Synthetics (cold - 60°C):** For synthetic or mixed fabric items.
- **Hygiene Plus:** Eliminates up to 99.99% of germs and mites by maintaining a constant temperature and thorough rinsing.
- **Drum Clean:** Program for cleaning the washing machine drum.
- **Dark Wash:** Specifically designed for dark-colored garments.

- **Spin/Drain:** For spinning or draining water from the drum.
- **Mixed Load:** For mixed loads of cotton and synthetic items.
- **Sportswear:** For sportswear and outdoor textiles.
- **Rinse:** Additional rinse cycle.
- **Express 15/30 min:** Quick wash programs for lightly soiled items.
- **Delicates/Silk:** For delicate items and silk.
- **Wool/Hand Wash:** For woolens and hand-washable items.

4.5 Option Selection

Press the option buttons to customize your wash cycle:

- **Easy Iron:** Reduces creasing.
- **Finish In:** Delays the start of the program.
- **Stain:** Activates the AntiStain system, which adapts water temperature, soaking time, and spin speed to effectively remove various stains.
- **Start/Pause/Add Laundry:** Starts or pauses the cycle. The 'Add Laundry' function allows you to add forgotten items during a running cycle, provided the water level and temperature are safe.
- **Temperature:** Adjusts the wash temperature.
- **SpeedPerfect:** Reduces the wash cycle duration by up to 65% without compromising wash results.
- **Rinse Plus:** Adds an extra rinse cycle.
- **Spin Speed/Rinse Hold:** Adjusts the spin speed or activates rinse hold.



Image 5: The 'Add Laundry' function allows you to pause the cycle and add forgotten items.

4.6 Starting and Ending a Cycle

Press the 'Start/Pause' button to begin the selected program. The machine will automatically proceed through the wash, rinse, and spin phases. Once the program is complete, the display will indicate 'End'. Open the door and remove your laundry.

5. Maintenance

Regular maintenance ensures optimal performance and extends the lifespan of your washing machine.

5.1 Cleaning the Detergent Dispenser

Pull out the detergent dispenser drawer completely. Remove any residue and clean it under running water. Reinsert the drawer.

5.2 Cleaning the Drum

Use the 'Drum Clean' program regularly (e.g., once a month) to prevent odors and maintain hygiene, especially if you frequently wash at low temperatures.

5.3 Cleaning the Drain Filter

The drain filter should be cleaned periodically to remove lint and small objects. Refer to the full instruction manual for the exact location and procedure for your model.

5.4 Exterior Care

Wipe the exterior surfaces with a soft, damp cloth. Do not use abrasive cleaners or solvents.

6. Troubleshooting

If you encounter issues with your washing machine, consult the following common problems and solutions before contacting service.

Problem	Possible Cause	Solution
Machine does not start	Power cord unplugged; door not closed properly; program not selected; 'Start/Pause' not pressed.	Check power connection; ensure door is latched; select program and press 'Start/Pause'.
Excessive vibration/noise	Transport bolts not removed; machine not level; uneven load.	**Ensure all transport bolts are removed (critical for new installations).** Level the machine using adjustable feet. Redistribute laundry in the drum.
Water leakage	Hoses loose or damaged; detergent dispenser overflowing; drain filter clogged.	Check hose connections; do not overfill detergent dispenser; clean drain filter.
Poor washing results	Incorrect program/temperature; insufficient detergent; overloaded drum.	Select appropriate program; use correct detergent dosage; reduce load size.

7. Specifications

Key technical specifications for the Bosch WGG04209FR washing machine:

Feature	Specification
Model Number	WGG04209FR
Brand	Bosch
Type	Front-Load Washing Machine
Capacity	9 kg / 63 Liters (drum volume)
Maximum Spin Speed	1200 rpm

Feature	Specification
Dimensions (D x W x H)	58.8 cm x 59.8 cm x 84.8 cm
Weight	74.2 kg
Color	White
Motor Type	EcoSilence Drive (Inverter)
Noise Level (Spin)	71 dB
Display Type	LED
Drum Material	Stainless Steel
Voltage	240 Volts
Installation Type	Freestanding

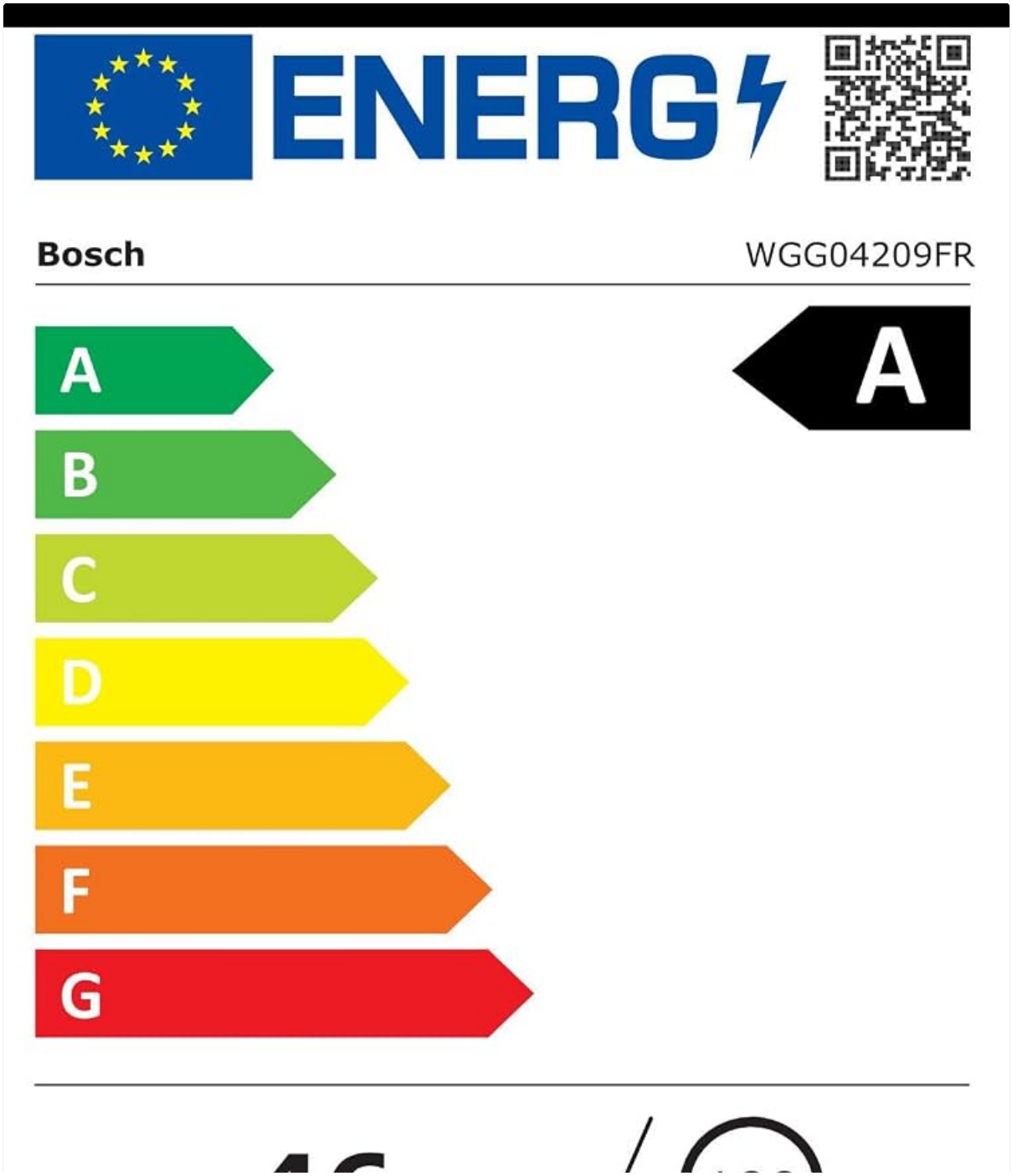

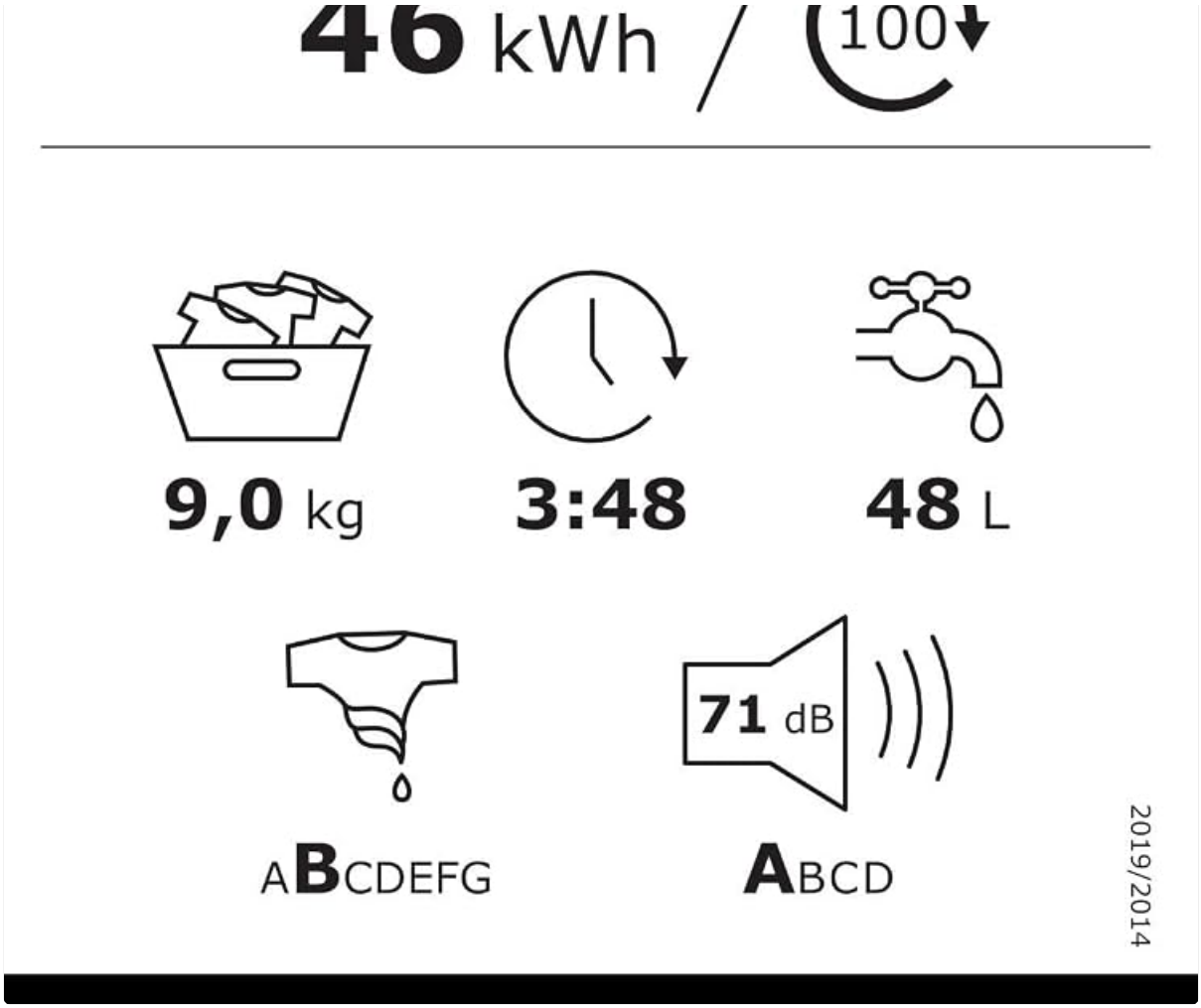

Image 6: Energy Efficiency Label for model WGG04209FR.

BOSCH
Des technologies pour la vie



CALCUL DE L'INDICE DE RÉPARABILITÉ ET PRÉSENTATION DES PARAMÈTRES AYANT PERMIS DE L'ÉTABLIR	*Lave-linge*

FICHE D'INFORMATION À TRANSMETTRE AUX DEMANDEURS
(cf. Article L. 541-9-2 du Code de l'environnement)

Date du calcul	01.06.2022
Nom ou marque commerciale du producteur ou de l'importateur	BOSCH
Adresse du producteur ou de l'importateur	BSH Hausgeräte GmbH, Carl-Wery-Strasse 34, 81739 München, ALLEMAGNE
Référence du modèle donnée par le producteur ou l'importateur	WGG04209FR / Code EAN: 4242005358076

Critère	Sous-critère	Note du sous-critère sur 10	Coefficient du sous critère	Note du critère sur 20	Total des notes des critères sur 100
CRITÈRE 1 : DOCUMENTATION	1.1 Durée de disponibilité de la documentation technique et relative aux conseils d'utilisation et d'entretien	7,3	2	14,6	87,9
CRITÈRE 2 : DÉMONTABILITÉ, ACCÈS, OUTILS, FIXATIONS	2.1 Facilité de démontage des pièces de la liste 2*	7,3	1	17,3	
	2.2 Outils nécessaires (liste 2)	10,0	0,5		
	2.3 Caractéristiques des fixations entre les pièces de la liste 1** et de la liste 2	10,0	0,5		
CRITÈRE 3 : DISPONIBILITÉ DES PIÈCES DÉTACHÉES	3.1 Durée de disponibilité des pièces de la liste 2	10,0	1	19,7	
	3.2 Durée de disponibilité des pièces de la liste 1	9,5	0,5		
	3.3 Délais de livraison des pièces de la liste 2	10,0	0,3		
	3.4 Délais de livraison des pièces de la liste 1	9,5	0,2		
CRITÈRE 4 : PRIX DES PIÈCES DÉTACHÉES	4. Rapport prix des pièces de la liste 2 sur prix de l'équipement neuf	10,0	2	20,0	
CRITÈRE 5 : CRITÈRE SPÉCIFIQUE	5.1 Accessibilité du compteur d'usage	10,0	1	16,3	
	5.2 Assistance à distance sans frais	6,0	0,5		
	5.3 Possibilité de réinitialisation logicielle	6,7	0,5		
			Note de l'indice sur 10		8,8

**liste 2 : liste des 3 à 5 pièces détachées au maximum (selon la catégorie d'équipements concernée) dont la casse ou les pannes sont les plus fréquentes ;*
***liste 1 : liste de 10 autres pièces détachées au maximum (selon la catégorie d'équipements concernée) dont le bon état est nécessaire au fonctionnement de l'équipement.*

BSH Electroménager, 26 avenue Michelet, 93400 Saint-Ouen
Standard: + 33 1 4948 3000, www.bsh-group.fr
Société par Actions Simplifiée à Associé Unique au capital de 10.675.000 EUR
Siège social: Saint-Ouen, R.C.S. Bobigny B 341 911 790
BOSCH et son logo sont des marques déposées de Robert Bosch GmbH, Allemagne

Image 7: Repairability Index score of 8.8/10.

For detailed product information and compliance, refer to the EPREL database: https://eprel.ec.europa.eu/qr/1176693

8. Warranty and Support

8.1 Manufacturer's Warranty

This Bosch washing machine comes with a **2-year manufacturer's warranty** from the date of purchase. Please retain your proof of purchase for warranty claims. The warranty covers defects in materials and workmanship under normal domestic use.

8.2 Spare Parts Availability

Bosch ensures the availability of spare parts for this model for up to**15 years**, supporting the longevity and repairability of your appliance.

8.3 Customer Support

For technical assistance, service requests, or to order spare parts, please contact Bosch customer support. Contact details can typically be found on the Bosch official website for your region or in the documentation supplied with your appliance.

© 2023 Bosch. All rights reserved. Bosch is a registered trademark.

Ask a question about this manual

Ask about setup, troubleshooting, compatibility, parts, safety, or missing instructions. Manuals+ will review the question and use this page's manual context to help answer it.

Name

Anonymous

Email

you@example.com

After a successful submission, we securely hash the supplied account or form email before sending it to Microsoft Advertising for conversion attribution. Privacy details.

Question

Example: How do I reset this device or fix this error?

Details

Model number, symptoms, what you tried, or the section of the manual you are using.

Submit question

Open the live page

https://manuals.plus/asin/B0BDZKNGS1

More documents and user manuals: **https://manuals.plus/**