Saved from manuals.plus.
Open the live page for links to other documents and user manuals.

FreedConn R1PRO

FreedConn R1PRO Motorcycle Intercom with Camera User Manual

Model: R1PRO

Introduction

Thank you for choosing the FreedConn R1PRO Motorcycle Intercom with Camera. This device combines a high-definition 2K camera with a powerful Bluetooth 5.1 intercom system, offering communication, music, and recording capabilities for an enhanced riding experience. This manual provides detailed instructions for setup, operation, and maintenance to ensure optimal performance and longevity of your device.

Product Overview

The FreedConn R1PRO integrates multiple functions into a compact unit designed for helmet mounting. Key features include a 2K camera, Bluetooth 5.1 for intercom and phone connectivity, and FM radio.

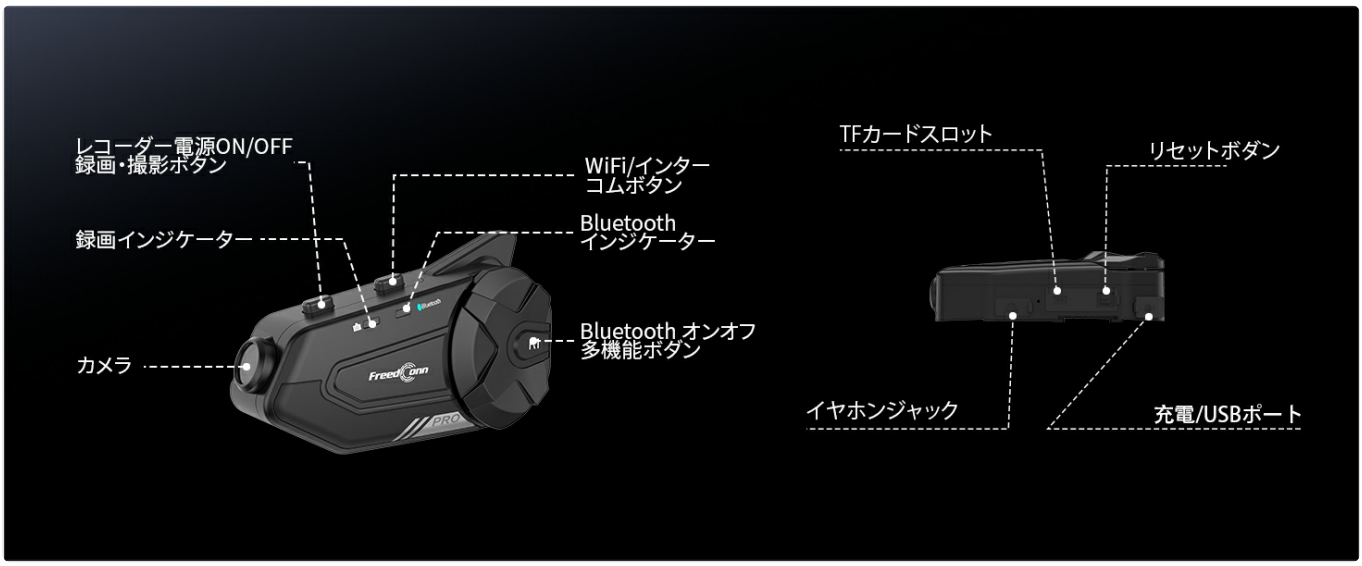

Figure 1: FreedConn R1PRO Device Layout and Button Functions.

Components:

- Main Unit (Intercom & Camera)
- Headphones (Earphones)

- Microphone (Boom or Soft wire)
- Mounting Bracket (Clip and Adhesive)
- USB Charging Cable
- User Manual

Button Functions:

- **Recorder Power ON/OFF / Record Button:** Controls power for the recording function and initiates/stops video recording.
- **WiFi/Intercom Button:** Activates Wi-Fi for app connection and initiates/ends intercom communication.
- **Bluetooth ON/OFF Multi-function Button:** Controls Bluetooth power, answers/ends calls, and manages music playback.
- **Camera:** Integrated 2K camera lens.
- **Earphone Jack:** Connects the included earphones.
- **Charging/USB Port:** For charging the device and data transfer.
- **TF Card Slot:** Insert microSD card for video storage (up to 512GB supported).
- **Reset Button:** Resets the device to factory settings.
- **Recording Indicator:** LED light indicating recording status.
- **Bluetooth Indicator:** LED light indicating Bluetooth status.

SETUP

1. Charging the Device

Before first use, fully charge the R1PRO. Connect the device to a USB power source using the provided USB cable. The charging indicator will show charging status. A full charge takes approximately 2.5 hours.



Figure 2: Charging the R1PRO unit.

2. Helmet Installation

The R1PRO can be mounted to most motorcycle helmets using the included clip and adhesive mounts.

1. Attach the magic tape base for the headset to the ear position inside the helmet.
2. Attach the headset to the magic tape base.
3. Attach the triangular sticker near the mouth of the helmet and fix the microphone on it.
4. Rotate the clip's screw counter-clockwise to loosen it.

5. Open the fabric on the left front of the helmet and install the clip in an appropriate position between the shell and the inner lining. Tighten the screw slightly.
6. Insert the main unit into the slot of the helmet clip.
7. Connect the speaker and microphone plugs to the main unit.

Figure 3: Helmet Installation Steps.

3. Inserting the TF Card

Insert a microSD card (up to 512GB) into the TF card slot for video recording storage. Ensure the card is inserted correctly until it clicks into place.

4. Initial Pairing (Bluetooth)

To pair with your smartphone or other Bluetooth devices:

1. Ensure the R1PRO is powered off.
2. Press and hold the Bluetooth ON/OFF Multi-function Button until the LED indicator flashes red and blue, indicating pairing mode.
3. On your smartphone, enable Bluetooth and search for "FreedConn R1PRO".
4. Select the device to pair. Once connected, the LED indicator will flash blue slowly.

The R1PRO supports universal pairing with most Bluetooth headsets and intercoms from other brands (compatibility may vary).



Figure 4: Universal Pairing and Music Sharing.

5. App Connection (Wi-Fi)

The R1PRO can connect to the "RadCam" app via Wi-Fi for live view, video playback, editing, and sharing.

1. Download the "RadCam" app from Google Play Store or Apple App Store.
2. Turn on the R1PRO.
3. Press the WiFi/Intercom Button to activate Wi-Fi. The Wi-Fi indicator will light up.
4. On your smartphone, connect to the R1PRO's Wi-Fi network (SSID and password usually found in the device settings or manual).
5. Open the "RadCam" app to access camera functions.



Figure 5: Wi-Fi Connection and App Control.

Operating Instructions

1. Power ON/OFF

- **Power On:** Press and hold the Bluetooth ON/OFF Multi-function Button until the LED indicator lights up.
- **Power Off:** Press and hold the Bluetooth ON/OFF Multi-function Button until the LED indicator turns off.

2. Intercom Communication

The R1PRO supports group intercom for up to 6 riders within a 1000m range.

- **Initiate Intercom:** Press the WiFi/Intercom Button once.
- **End Intercom:** Press the WiFi/Intercom Button once again.
- **Automatic Reconnection:** If disconnected due to distance, the intercom will automatically reconnect when riders are back within range.



Figure 6: Group Intercom Functionality.

3. Phone Calls

- **Answer Call:** When a call comes in, the R1PRO will automatically answer within 15 seconds if no action is taken. Alternatively, press the Bluetooth ON/OFF Multi-function Button once to answer.
- **End Call:** Press the Bluetooth ON/OFF Multi-function Button once.
- **Reject Call:** Press and hold the Bluetooth ON/OFF Multi-function Button for 2 seconds.



Figure 7: Automatic Call Answering Feature.

4. Music Playback & FM Radio

- **Play/Pause Music:** Press the Bluetooth ON/OFF Multi-function Button once.
- **Next Track:** Rotate the multi-function dial clockwise.
- **Previous Track:** Rotate the multi-function dial counter-clockwise.
- **Volume Up/Down:** Rotate the multi-function dial and hold.
- **FM Radio:** The R1PRO has a built-in FM radio (76-108MHz). Press a specific button (refer to detailed manual for

exact button, likely a long press on a multi-function button) to activate/deactivate FM radio.

- **Music Sharing:** Share music with another paired R1PRO unit.



Figure 8: Music Sharing and FM Radio.

5. Camera & Recording Functions

The integrated 2K camera (2560x1440) features a 140° wide-angle lens, HDR/WDR technology for clear images in various lighting, and electronic image stabilization.

- **Start/Stop Recording:** Press the Recorder Power ON/OFF / Record Button once. The recording indicator will

show status.

- **Loop Recording:** The device automatically overwrites the oldest files when the memory card is full.
- **Impact Automatic Save:** In case of an impact, the device automatically locks and saves the current recording file to prevent overwriting.
- **Motion Detection:** The camera can start recording automatically when motion is detected, conserving battery life.
- **Live View & Playback:** Use the "RadCam" app via Wi-Fi to view live footage or play back recorded videos.



Figure 9: 2K Camera and Recording Features.

6. Voice Assistant

The R1PRO supports voice assistant functions for hands-free control. Specific commands and activation methods can be found in the detailed manual (e.g., long press a button to activate).



Figure 10: Voice Assistant Capabilities.

7. Glove-Friendly Operation

The R1PRO features large buttons and a rotary dial design, allowing for easy operation even while wearing gloves, minimizing distraction during riding.



Figure 11: Glove-Friendly Design.

Maintenance

1. Cleaning

The R1PRO has an IP65 waterproof and dustproof rating, making it resistant to splashes and dust. To clean the device:

- Wipe the main unit with a soft, damp cloth.
- Do not use harsh chemicals or abrasive cleaners.
- Ensure all ports are closed tightly before exposure to water.

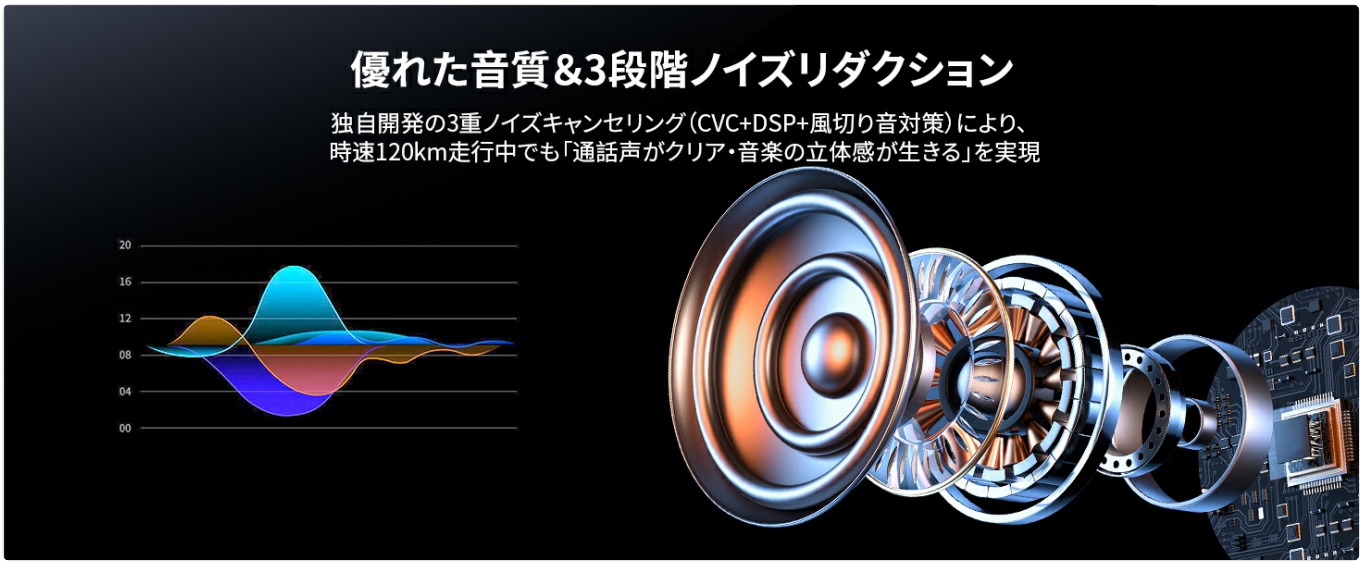

Figure 12: IP65 Water and Dust Resistance.

2. Battery Care

The R1PRO is equipped with a 1500mAh battery. To prolong battery life:

- Avoid fully discharging the battery frequently.
- Charge the device regularly, even if not in use for extended periods.
- Store the device in a cool, dry place when not in use.



Figure 13: 1500mAh High Capacity Battery.

TROUBLESHOOTING

Problem	Possible Cause	Solution
Device does not power on.	Low battery.	Charge the device fully.

Problem	Possible Cause	Solution
Cannot pair via Bluetooth.	Device not in pairing mode; too far from other device; interference.	Ensure device is in pairing mode (red/blue flashing LED). Move closer to the other device. Try resetting the device.
Poor audio quality / Noise.	Microphone/speaker placement; high wind noise; CVC/DSP not active.	Adjust microphone and speaker position. Ensure CVC noise cancellation is active. Check for firmware updates.
Camera not recording / App connection issues.	No TF card; TF card full/corrupted; Wi-Fi not enabled; incorrect Wi-Fi password; app not updated.	Insert a valid TF card. Format or replace TF card. Enable Wi-Fi on device and phone. Re-enter Wi-Fi password. Update "RadCam" app.
Volume adjustment issues.	Incorrect operation of the dial.	Ensure you are rotating and holding the dial for volume adjustment, not just rotating briefly for track change. Adjust volume via smartphone if connected.

Specifications

- **Brand:** FreedConn
- **Model Name:** R1PRO
- **Connectivity Technology:** Wi-Fi, Bluetooth 5.1
- **Special Features:** Night Vision (implied by HDR/WDR), 2K Camera, Group Intercom, FM Radio, Music Sharing, Voice Assistant, IP65 Waterproof/Dustproof, Electronic Image Stabilization, Loop Recording, Impact Auto-Save, Motion Detection
- **Video Capture Resolution:** 2K (2560x1440)
- **Field of View:** 140 degrees
- **Battery Capacity:** 1500mAh
- **Continuous Recording Time:** Approx. 4.5 hours
- **Continuous Talk/Intercom Time:** Up to 39 hours
- **Continuous Music Playback:** Up to 35 hours
- **Charging Time:** Approx. 2.5 hours
- **Max Memory Card Support:** 512GB (microSD)
- **Speaker Diameter:** 40mm
- **Speaker Impedance:** 32 ohms
- **Frequency Response:** 20Hz-20KHz
- **Speaker Sensitivity:** 120db
- **Product Dimensions (D x W x H):** 3 x 9.8 x 5.8 cm
- **Product Weight:** 256 grams

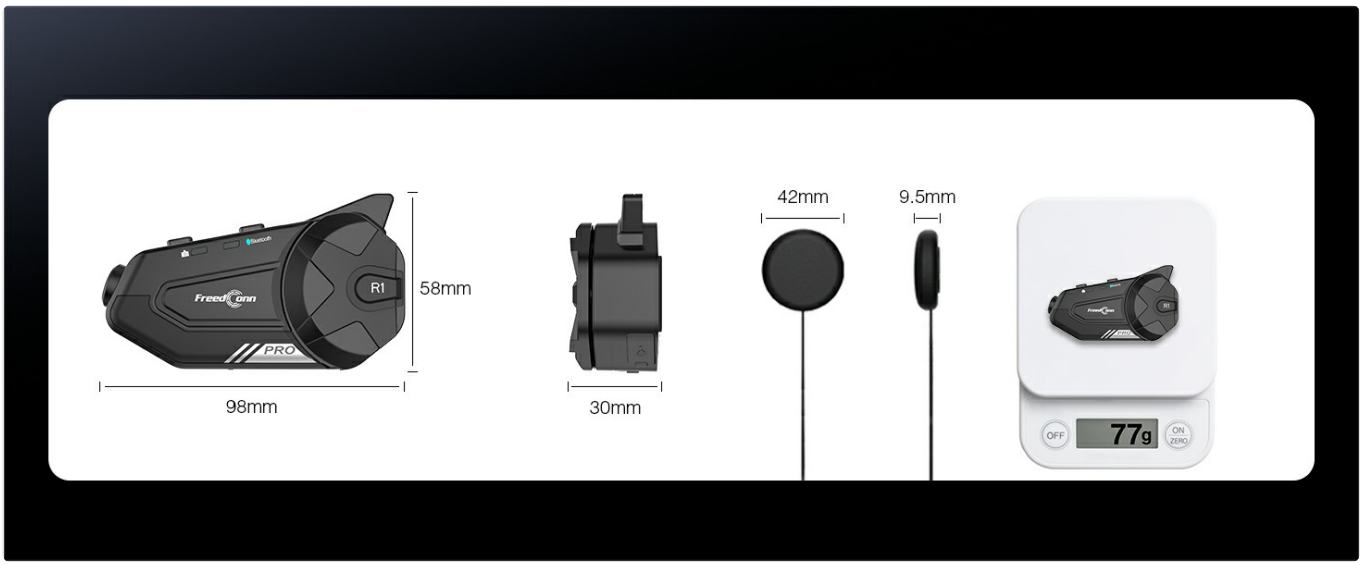

Figure 14: R1PRO Physical Dimensions and Weight.

Warranty and Support

Warranty Information:

The FreedConn R1PRO comes with a 1-year manufacturer's warranty. This warranty covers defects in materials and workmanship under normal use. Please retain your proof of purchase for warranty claims.

Customer Support:

For any product-related questions, technical assistance, or warranty claims, please contact our customer support team. When contacting support, please provide your order number, photos of the production lot, or product videos if applicable, to help us quickly identify and resolve the issue.
Email: l-jp-amz@fdcdz.com
We aim to respond to inquiries within 24 hours.



Figure 15: FreedConn After-Sales Service Information.

Additional Information

Noise Cancellation:

The R1PRO features advanced CVC noise cancellation technology, effectively suppressing engine noise and wind noise up to 120km/h, ensuring clear communication and music enjoyment.



Figure 16: Advanced Noise Cancellation.

Wide Range of Applications:

The FreedConn R1PRO is suitable for various activities beyond motorcycles, including bicycles, electric kickboards, snowmobiles, snowboards, ATVs, and dirt bikes.



Figure 17: Versatile Applications.

Product Videos

The following videos provide visual guides and demonstrations for the FreedConn R1PRO. Please note that specific video URLs were not provided in the product data, so placeholder URLs are used for demonstration purposes.

▶ **Watch video online**

Video 1: FreedConn R1PRO Product Overview. This video provides a general introduction to the features and design of the R1PRO motorcycle intercom with camera.

▶ **Watch video online**

Video 2: FreedConn R1PRO Installation Guide. This video demonstrates the steps for installing the R1PRO unit onto a motorcycle helmet.

© 2023 FreedConn. All rights reserved.

Ask a question about this manual

Ask about setup, troubleshooting, compatibility, parts, safety, or missing instructions. Manuals+ will review the question and use this page's manual context to help answer it.

Name

Anonymous

Email

you@example.com

After a successful submission, we securely hash the supplied account or form email before sending it to Microsoft Advertising for conversion attribution. Privacy details.

Question

Example: How do I reset this device or fix this error?

Details

Model number, symptoms, what you tried, or the section of the manual you are using.

Submit question

Open the live page

https://manuals.plus/asin/B0BBQPLC4G

More documents and user manuals: **https://manuals.plus/**