DAELIM DOBIDOS DB-5600

DAELIM DOBIDOS DB-5600 Smart Bidet Seat Instruction Manual

Model: DB-5600

Product Overview Setup & Installation Operating Instructions Maintenance Troubleshooting Specifications Warranty & Support

1. Product Overview

The DAELIM DOBIDOS DB-5600 Smart Bidet Seat is designed to provide enhanced hygiene and comfort. This electric bidet seat features a heated seat, adjustable water temperature and pressure, a warm air dryer, and a self-cleaning nozzle. It is designed for round toilets and incorporates energy-saving ECO modes and a night light for convenience.

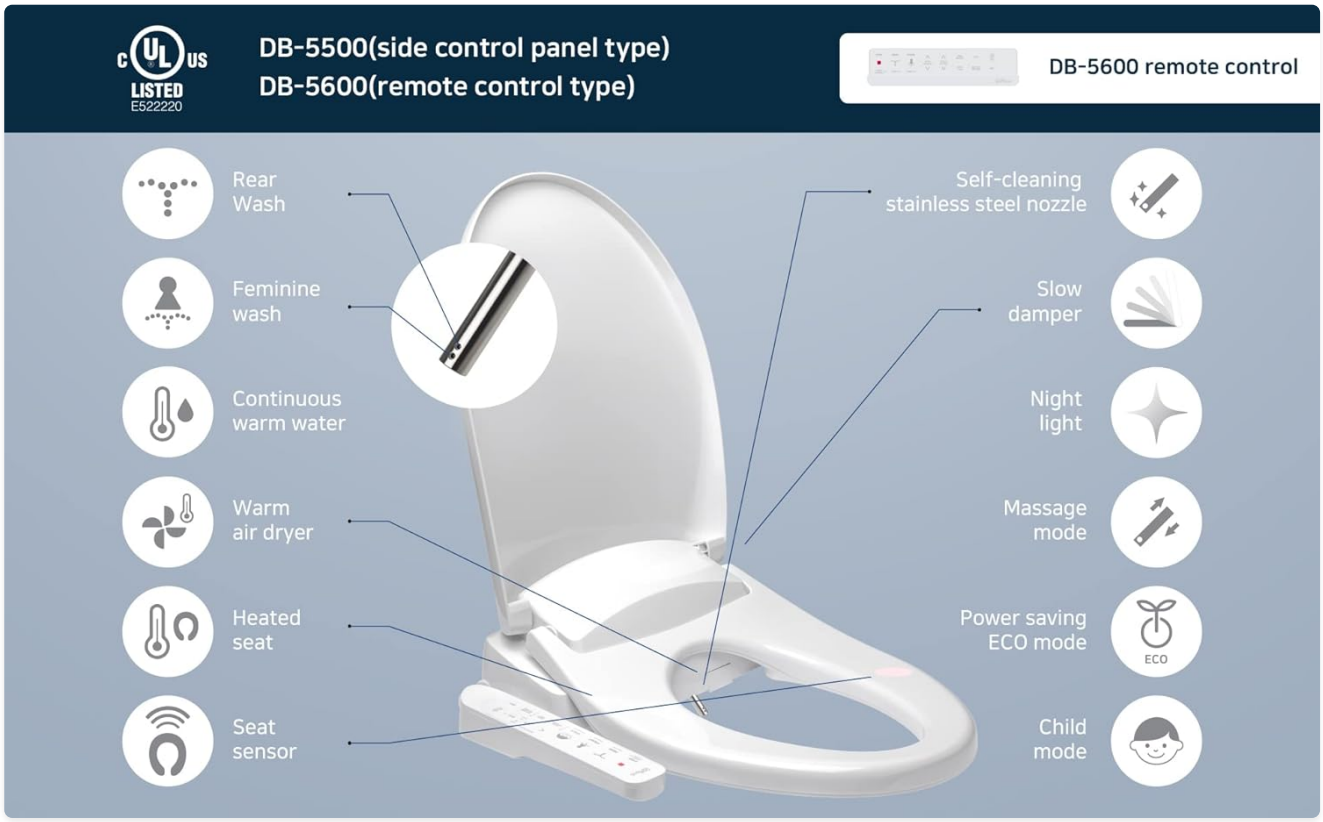

The DAELIM DOBIDOS DB-5600 Smart Bidet Seat.

Key Features:

- **Heated Seat:** Provides warmth for comfort, especially in colder environments.
- **Adjustable Water Temperature & Pressure:** Customize your wash experience.
- **Warm Air Dryer:** Reduces the need for toilet paper.
- **Self-Cleaning Nozzle:** Ensures hygienic conditions and convenient maintenance.
- **ECO Modes:** Energy-saving settings to reduce electricity consumption.
- **Night Light:** Illuminates the toilet bowl for nighttime use.
- **Child Mode:** Gentle settings for children.

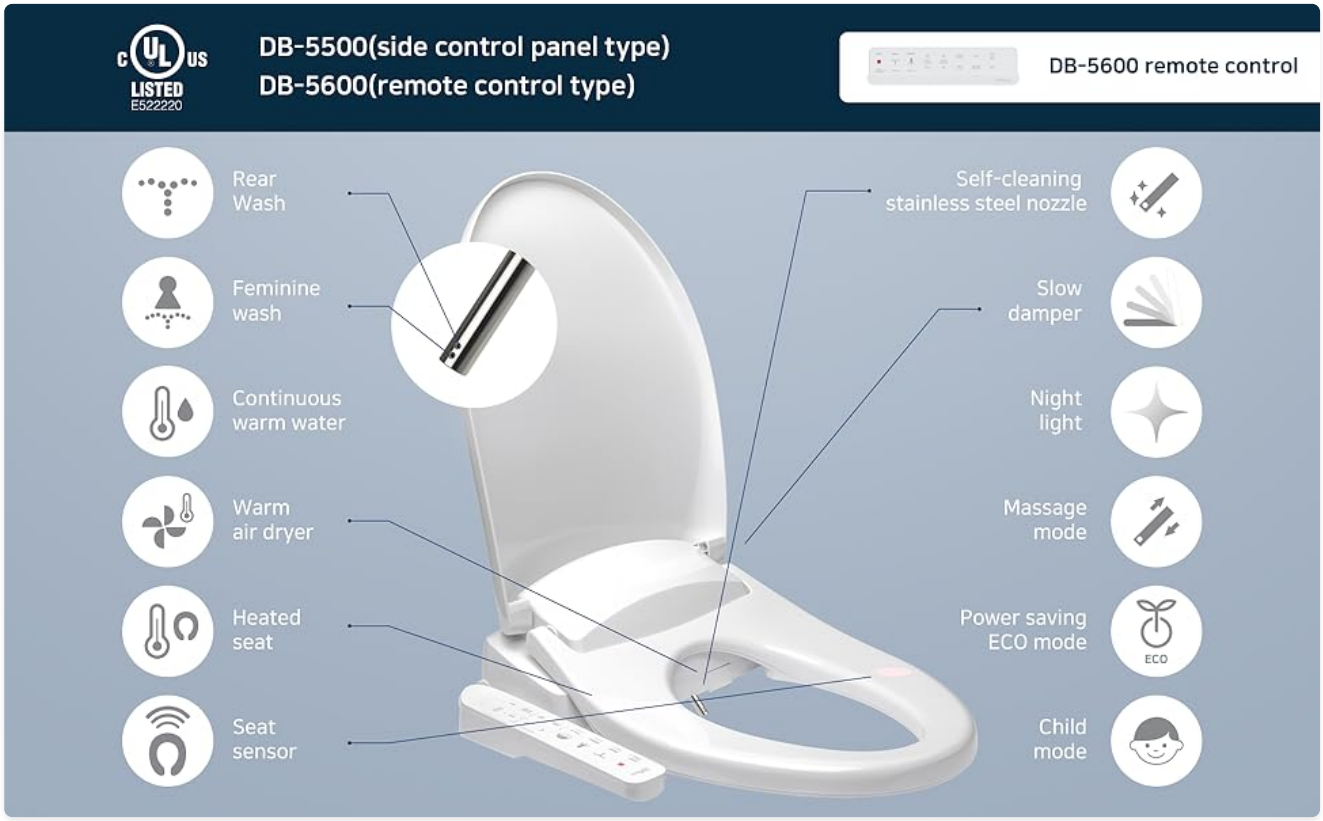

Overview of features for DB-5500 (side control) and DB-5600 (remote control) models.

2. Setup & Installation

Follow these steps for proper installation of your DAELIM DOBIDOS DB-5600 Smart Bidet Seat. Ensure you have the necessary tools: a screwdriver (preferably electric) and a wrench.

Installation Steps:

1. **Prepare:** Gather all included parts: flexible hose, base bracket, bolt brackets (2 pcs), screws (2 pcs), T-Valve & Packing, and rubber nuts (2 pcs).

All parts included for installation.

2. **Fix Plate Assembly:** Secure the base bracket to the toilet bowl using the provided screws and rubber nuts. Ensure the bracket is properly aligned and does not touch the toilet water tank.
3. **Bidet Seat Assembly:** Carefully slide the bidet seat onto the fixed base bracket until it clicks into place.
4. **Connecting Water Supply Hose:** Turn off the water supply to your toilet. Install the T-valve at the toilet's water inlet. Connect the flexible hose from the T-valve to the bidet seat's water inlet. Ensure all connections are tight to prevent leaks. Turn the water supply back on and check for any leaks.

Installation Video Guide:

Your browser does not support the video tag.

This video provides a step-by-step guide for the easy do-it-yourself installation of the smart bidet seat.

Toilet Fit Check Guide:

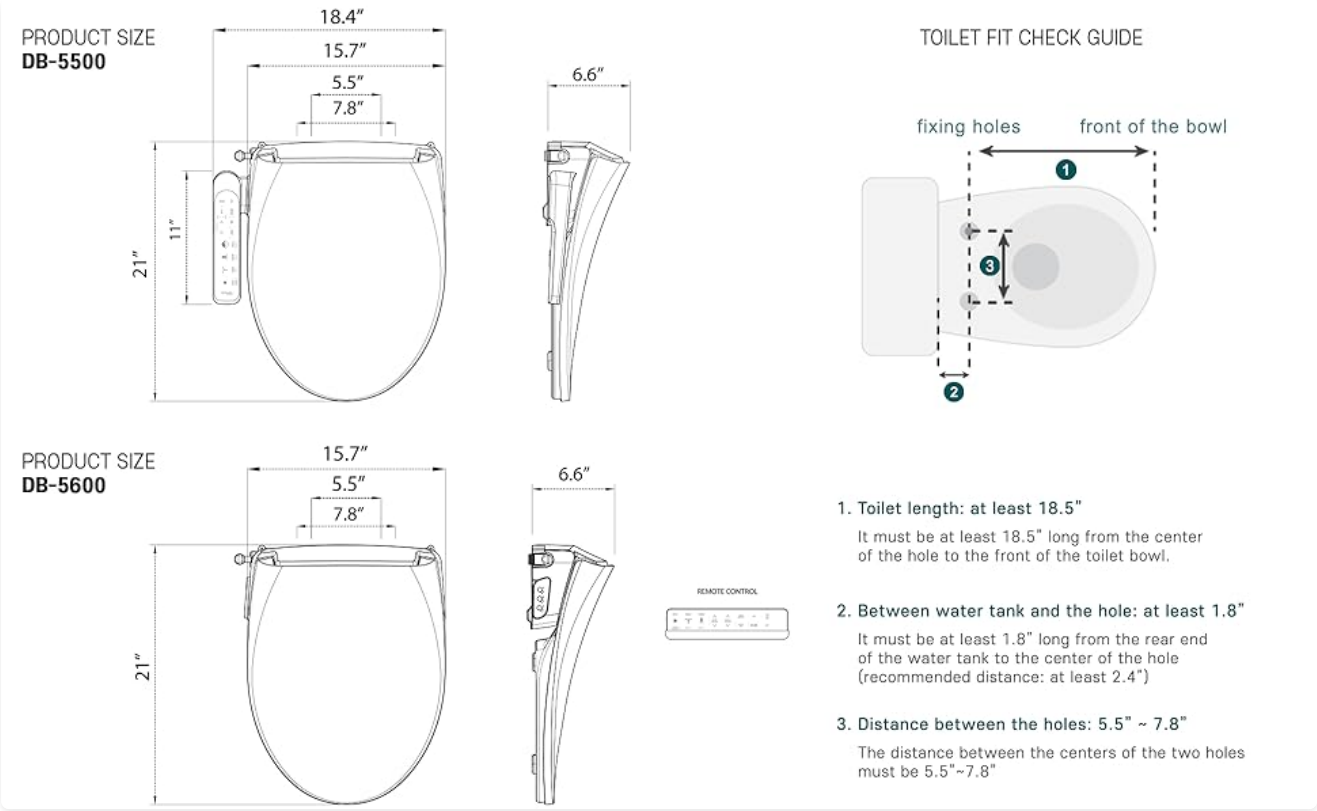

Refer to this guide to ensure proper fitment of the bidet seat on your toilet.

3. Operating Instructions

The DB-5600 model features a remote control for easy operation. The DB-5500 model uses a side control panel. Both offer similar functions.

Basic Functions:

- **Rear Wash:** Activates the rear cleansing function.
- **Feminine Wash:** Activates the front cleansing function.
- **Water Temperature:** Adjust the water temperature to your preference (3 levels).
- **Water Pressure:** Adjust the water spray intensity (3 levels).
- **Nozzle Position:** Adjust the nozzle's position for optimal cleaning.
- **Warm Air Dryer:** Activates the warm air drying function (3 levels).
- **Heated Seat:** Adjust the seat temperature (3 levels).
- **Night Light:** Turns on/off the soft blue LED night light.
- **ECO Mode:** Activates energy-saving modes to reduce power consumption.
- **Child Mode:** Provides a gentler wash and dry cycle suitable for children.
- **Self-Cleaning Nozzle:** The nozzle automatically cleans itself before and after each use.

The nozzle offers 3 adjustable levels for water pressure and position.

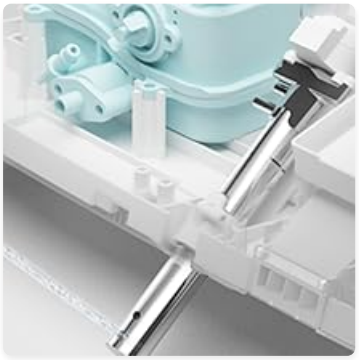

The heated seat provides 3 temperature levels for personalized comfort.

The warm air dryer features 3 temperature levels for efficient drying.

Operating Video Guide:

Your browser does not support the video tag.

This video demonstrates the various functions and operations of the Daelim Smart Seat Bidet.

ECO Modes:

The bidet seat includes two ECO modes to conserve energy:

- **ECO Mode Level 1:** When not in use, water temperature and seat temperature remain at 91.4°F, reducing monthly power consumption by 26%.
- **ECO Mode Level 2:** When not in use, water temperature and seat temperature remain at 77°F, reducing monthly power consumption by 42%.

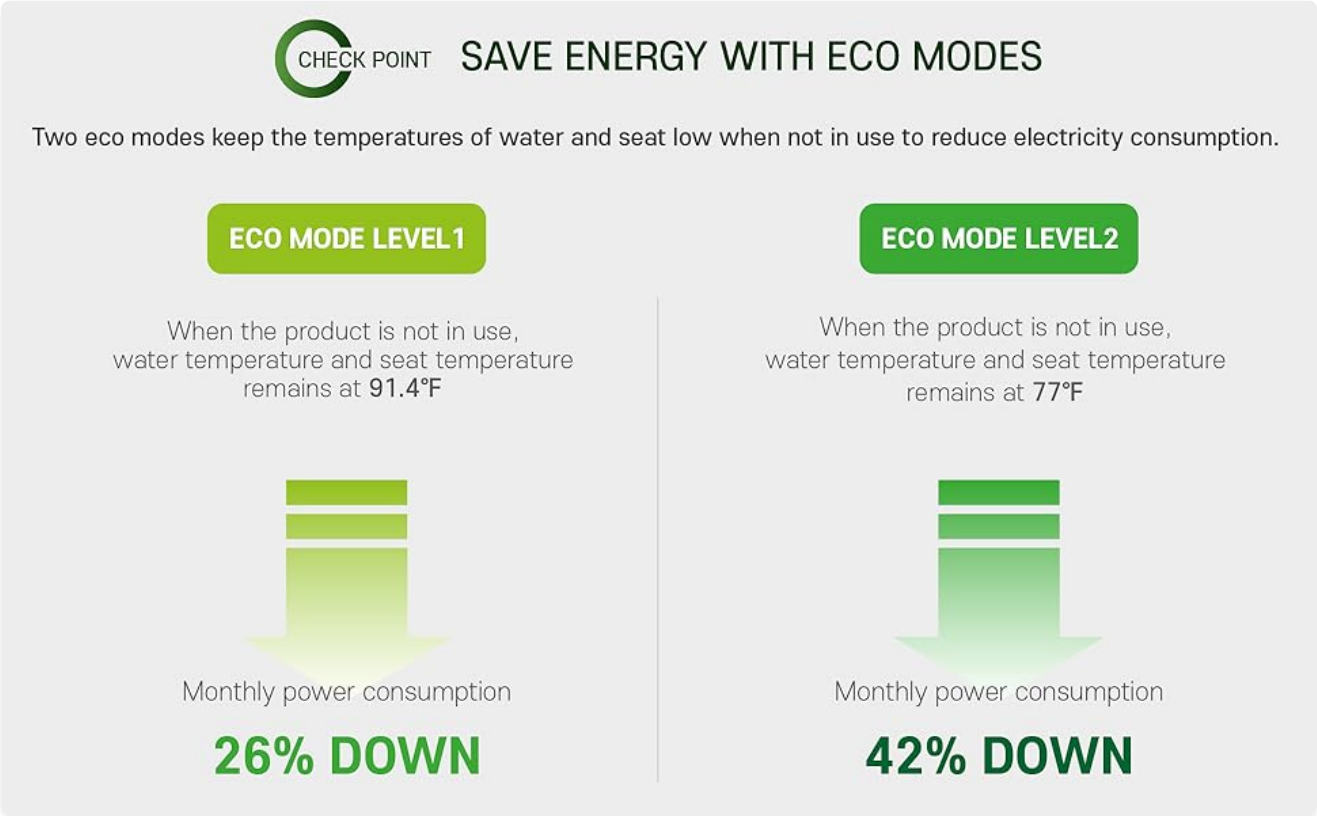

Information on the energy-saving ECO modes.

Night Light Function:

The night light provides subtle illumination for convenience in the dark.

4. Maintenance

Regular maintenance ensures the longevity and hygienic operation of your bidet seat.

Self-Cleaning Nozzle:

The bidet features a self-cleaning stainless steel nozzle. It automatically cleans itself with water before and after each use to prevent the accumulation of waste and maintain hygienic conditions. No manual cleaning of the nozzle is typically required for daily use.

General Cleaning:

- Unplug the bidet seat from the power outlet before cleaning.
- Use a soft, damp cloth and a mild, non-abrasive cleaner to wipe down the exterior surfaces.
- Avoid using harsh chemicals, abrasive pads, or solvents, as these can damage the finish.
- Ensure no water enters the electrical components.

5. Troubleshooting

If you encounter issues with your DB-5600 Smart Bidet Seat, refer to the following common troubleshooting tips:

Nozzle Not Extending / Water Drips / Temperature Lights Blinking:

- **Check Power:** Ensure the bidet seat is securely plugged into a working electrical outlet.
- **Reset Unit:** Unplug the unit for 30 seconds, then plug it back in. This can resolve temporary electronic glitches.
- **Water Supply:** Confirm that the water supply valve to the toilet is fully open.
- **Seat Sensor:** The bidet functions only when the seat sensor detects a user. Ensure you are properly seated.
- **Water Tank Refill:** If the water temperature lights are blinking, the internal water tank might be refilling or experiencing an issue. Press the REAR wash button to initiate water filling. After approximately 5 seconds, you should hear a 'beep' sound indicating the tank is full.
- **Nozzle Clog:** Although the nozzle is self-cleaning, a severe clog could occur. If the nozzle is not extending or water is dripping, gently inspect the nozzle for any visible obstructions.

General Issues:

- **No Power:** Check the circuit breaker and ensure the outlet is functional.
- **Weak Spray:** Verify the water supply valve is fully open and check the water pressure settings on the control panel/remote.
- **No Heat:** Ensure the heated seat and water temperature settings are activated and adjusted to your desired level.

If the problem persists after attempting these troubleshooting steps, please contact customer support.

6. Specifications

Manufacturer	DAELIM TRADING CO., LTD.
Part Number	DB-5600
Item Weight	13.67 pounds
Package Dimensions	23 x 20.5 x 9 inches
Item Model Number	DB-5600

Style	Modern
Material	Plastic
Shape	Round
Batteries Included?	No
Batteries Required?	No
Date First Available	June 13, 2022

7. Warranty & Support

Warranty Information:

Specific warranty details for the DAELIM DOBIDOS DB-5600 Smart Bidet Seat are not provided in this manual. Please refer to the product packaging or the manufacturer's official website for the most current warranty terms and conditions.

Customer Support:

For technical assistance, troubleshooting beyond this guide, or warranty claims, please contact DAELIM DOBIDOS customer support. Contact information can typically be found on the product packaging, the official DAELIM DOBIDOS website, or through your retailer.

© 2023 DAELIM DOBIDOS. All rights reserved.