**Saved from manuals.plus.**
**Open the live page for links to other documents and user manuals.**



### Heschen HS1-100 4P 220V

# Heschen HS1-100 Household AC Contactor Instruction Manual

Model: HS1-100 4P 220V

## 1. Introduction

The Heschen HS1-100 Household AC Contactor is an electromagnetic switching device designed for controlling high currents with low currents. It enables remote or automatic operation of electrical circuits. This contactor is engineered for rapid response, long service life, and reliable safety in various applications.




An image displaying the Heschen HS1-100 AC Contactor alongside a description of its core function as an electromagnetic switching device for controlling high currents with low currents, enabling remote or automatic operation. It highlights rapid response, long service life, and reliable safety.

## 2. Specifications

This section details the electrical and mechanical specifications of the Heschen HS1-100 AC Contactor.

- **Product Name:** Household AC Contactor
- **Rating:** 220V/230VAC, 100A
- **Contact Type:** 2NO 2NC, 4 Poles
- **Rated Insulation Voltage (Ui):** 500V
- **Rated Operational Voltage (Ue):** 400V
- **AC-7a Rating:** 38KW
- **AC-7b Rating:** 11KW
- **Net Weight:** 571g
- **Mounting:** 35mm DIN Rail

## Main parameter and technical performance

| | | |
|---|---|---|
| Power circuit | | |
| Voltage rating(Ue) | 1P.2P | 250V AC |
| | 3P.4P | 400V AC |
| Frequency | | 50/60Hz |
| Endurance(0-C) | | 1,000,000 cycles |
| Electrical | | 100,000 cycles |
| Maximum number of switching operatlon a day | | 100 |
| Insulation vwltage(Ui) | | 500V AC |
| Pollution degree | | 2 |
| Rated impulse withstand voltage(Uimp) | | 2.5KV ( 4KV for 12/24/48V AC ) |
| Degree of protection (EC 60529) | Device only | IP20 |
| | Device in modular enclosure | IP40 |
| Operating temperature | | -5℃~+60℃ |
| Storage temperature | | -40℃~+70℃ |
| Tropicalization(IEC 60068.1) | | Treatment 2 (relative humidity 95% at 55℃ |

A detailed table outlining the main technical parameters and performance characteristics of the Heschen HS1-100 AC Contactor, including voltage ratings, frequency, endurance, electrical life, insulation voltage, pollution degree, rated impulse withstand voltage, degree of protection, and operating/storage temperatures.

## 3. Safety Information

**WARNING: Electrical shock hazard. Installation and maintenance should only be performed by qualified personnel.**

- Always disconnect power before installing, servicing, or removing the contactor.
- Ensure all wiring complies with local and national electrical codes.
- Verify correct voltage and current ratings before connecting to a circuit.
- Do not operate the contactor if it appears damaged.
- Use appropriate personal protective equipment (PPE) when working with electrical systems.

## 4. Installation and Setup

### 4.1 Dimensions

Refer to the diagram below for the physical dimensions of the contactor to ensure proper fit and mounting space.

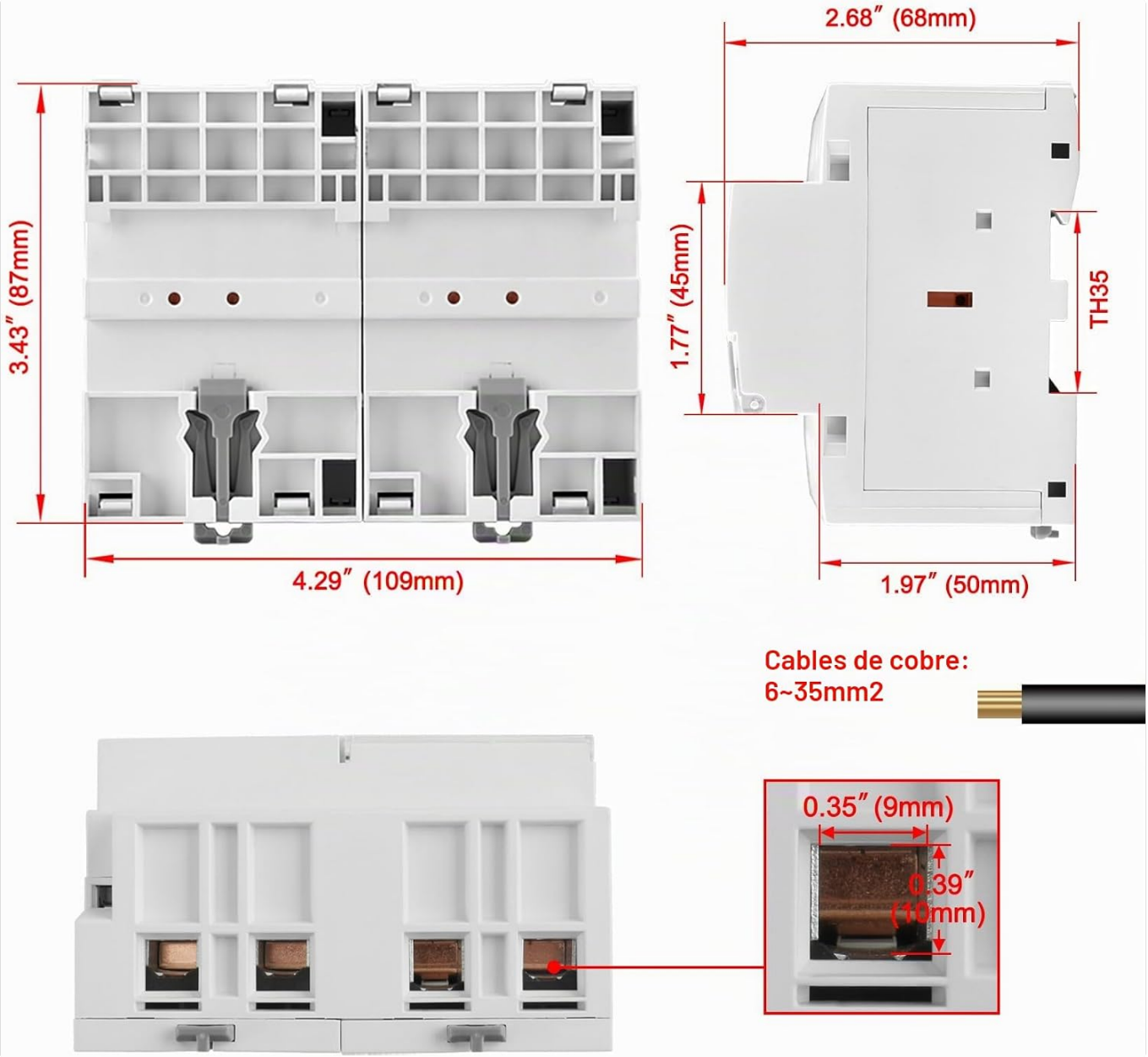


A technical drawing illustrating the precise dimensions of the Heschen HS1-100 AC Contactor, including length, width, height, and DIN rail mounting specifications, provided in both inches and millimeters for accurate installation planning. It also shows the recommended copper cable size for connections (6-35mm²).

### 4.2 Mounting

The Heschen HS1-100 Contactor is designed for mounting on a standard 35mm DIN rail. Snap the contactor onto the DIN rail securely.

### 4.3 Wiring Connections

Follow the wiring diagram carefully to connect the input power, control equipment, and load. Ensure all connections are tight and secure.

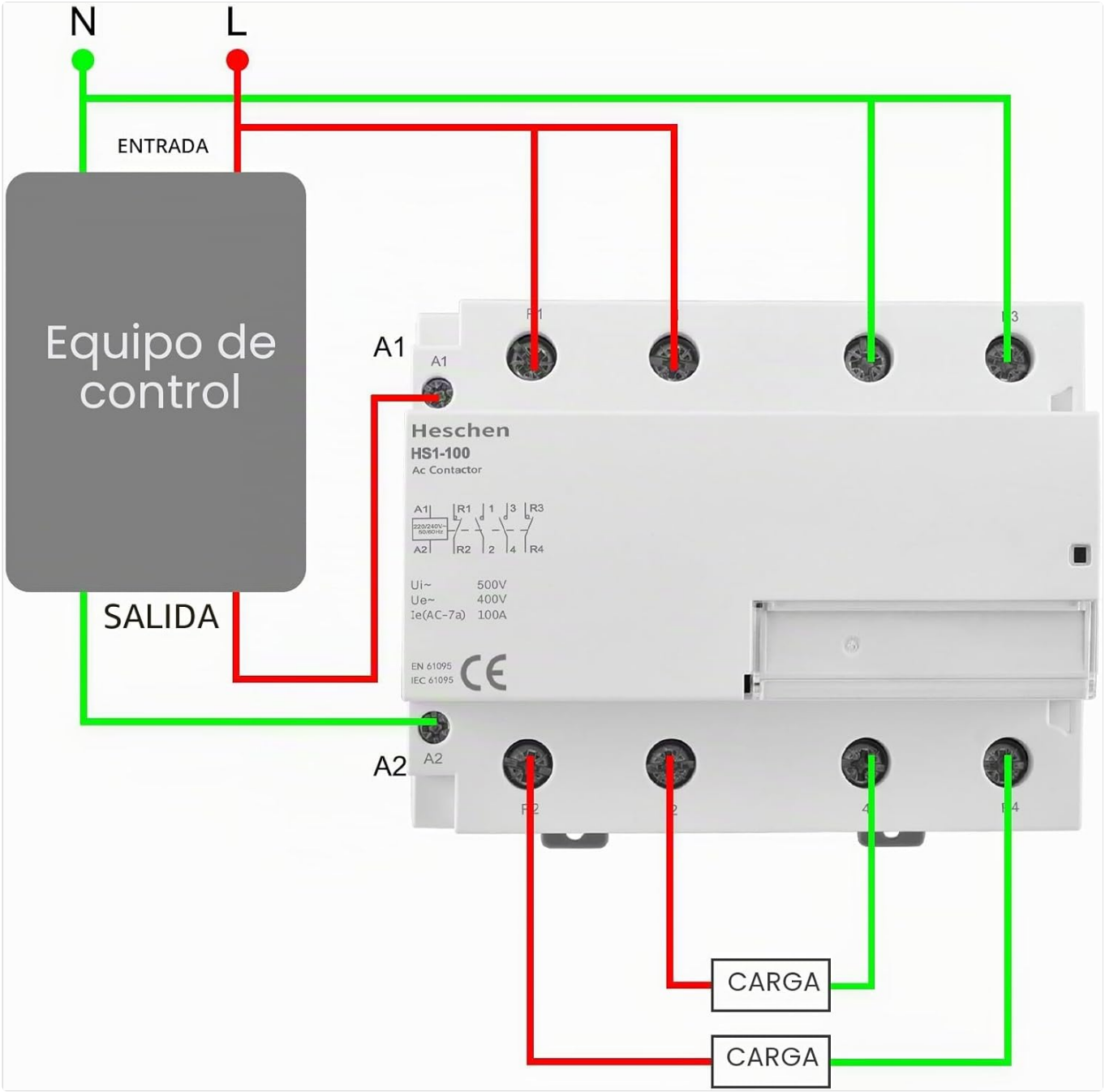


A clear wiring diagram for the Heschen HS1-100 AC Contactor, detailing the connections for Line (L), Neutral (N), control equipment input and output, and the load. This diagram is essential for correct and safe electrical installation.

### 4.4 Terminal Tightening

Use an appropriate screwdriver to tighten the terminal screws. Avoid using power tools, which can overtighten and damage the terminals.

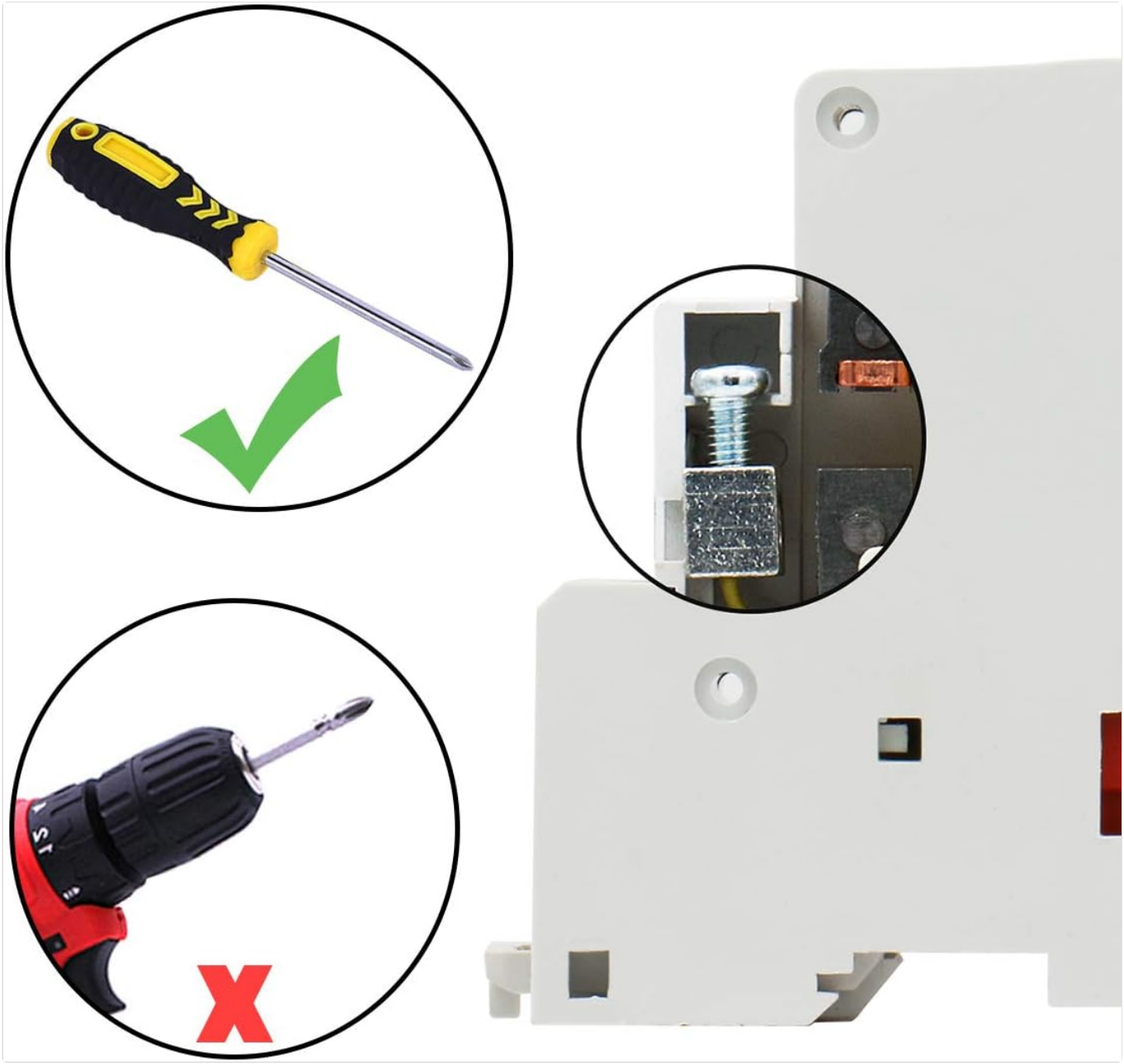

An image demonstrating the recommended tool for securing terminal connections on the contactor: a manual screwdriver (indicated by a green checkmark). It explicitly advises against using a power drill (indicated by a red 'X') to prevent overtightening and damage.

## 5. Operation

The Heschen HS1-100 AC Contactor operates by receiving a low-current signal to its coil (A1 and A2 terminals), which then energizes an electromagnet. This electromagnet closes the main contacts (R1, R3, 1, 3 to R2, R4, 2, 4), allowing high current to flow to the connected load. When the control signal is removed, the electromagnet de-energizes, opening the main contacts and disconnecting power to the load.
The contactor features 2 Normally Open (NO) and 2 Normally Closed (NC) contacts, providing flexibility for various control circuit designs.

## 6. Maintenance

- Periodically inspect the contactor for any signs of physical damage, overheating, or loose connections.
- Ensure that the mounting remains secure on the DIN rail.
- Clean any dust or debris from the contactor to prevent interference with its operation and to ensure proper heat dissipation.

- Do not attempt to disassemble the contactor for internal repairs. If faulty, replace the unit.

## 7. Troubleshooting

- **Contactor does not energize:** Check the control circuit for proper voltage supply to the A1/A2 terminals. Verify that the control switch or device is functioning correctly.
- **Contactor hums excessively:** This may indicate a loose connection, foreign material in the magnetic circuit, or incorrect voltage. Disconnect power and inspect.
- **Overheating:** Ensure the contactor is not overloaded beyond its rated current. Check for proper ventilation and clean any dust accumulation.
- **Contacts not making proper connection:** This could be due to worn contacts or mechanical issues. If repeated operation causes issues, consider replacement.

If issues persist after basic troubleshooting, consult a qualified electrician.

## 8. Usage Scenarios

The Heschen HS1-100 Household AC Contactor is suitable for a wide range of applications where reliable switching of electrical loads is required.

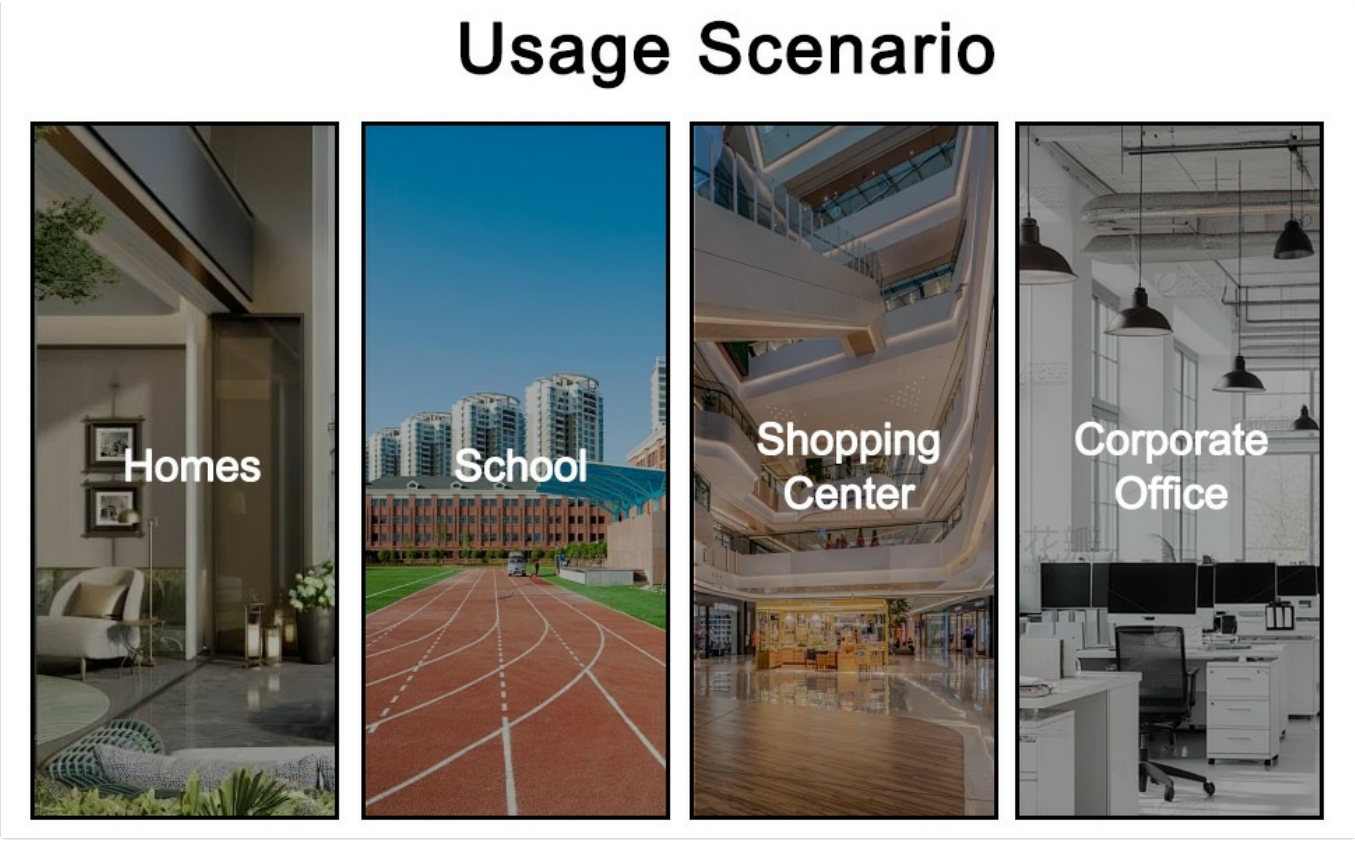


An image showcasing diverse application environments for the Heschen HS1-100 AC Contactor, including residential homes, educational institutions (schools), commercial spaces (shopping centers), and corporate offices, highlighting its versatility in various settings.

- **Residential Homes:** For controlling lighting, heating, or other high-power appliances.
- **Schools:** In electrical panels for managing various circuits.
- **Shopping Centers:** For controlling large lighting systems, HVAC, or other commercial equipment.
- **Corporate Offices:** Integrated into building management systems for power distribution and control.

## 9. Warranty and Support

Heschen products are manufactured to high-quality standards. For specific warranty information or technical support, please refer to the product packaging or contact Heschen customer service directly. Keep your purchase receipt for warranty claims.

© 2024 Heschen. All rights reserved.


### Ask a question about this manual

Ask about setup, troubleshooting, compatibility, parts, safety, or missing instructions. Manuals+ will review the question and use this page's manual context to help answer it.

**Name**

Anonymous

**Email**

you@example.com

After a successful submission, we securely hash the supplied account or form email before sending it to Microsoft Advertising for conversion attribution. Privacy details.

**Question**

Example: How do I reset this device or fix this error?

**Details**

Model number, symptoms, what you tried, or the section of the manual you are using.

Submit question

**Open the live page**

**https://manuals.plus/asin/B09TP5498Q**

More documents and user manuals: **https://manuals.plus/**