Saved from manuals.plus.
Open the live page for links to other documents and user manuals.

LEDKIA LIGHTING 85040_170594

LEDKIA LIGHTING Big Ivalo 28W CCT Selectable LED Metal Pendant Lamp User Manual

Model: 85040_170594

1. Introduction

Thank you for choosing the LEDKIA LIGHTING Big Ivalo 28W CCT Selectable LED Metal Pendant Lamp. This manual provides essential information for the safe installation, operation, and maintenance of your new lighting fixture. Please read these instructions carefully before installation and retain them for future reference.
The Big Ivalo pendant lamp features a modern, minimalist design crafted from aluminum. It offers 28W of power, a luminous flux of 3000 lm, and a CCT (Correlated Color Temperature) selectable system, allowing you to choose between warm white, neutral white, and cool white light to suit your environment.

2. Safety Instructions

- **Electrical Safety:** Installation must be performed by a qualified electrician in accordance with all local and national electrical codes. Ensure the power supply is disconnected at the circuit breaker before installation, maintenance, or cleaning.
- **Voltage:** Verify that the supply voltage matches the requirements specified on the product label.
- **Handling:** Handle the lamp with care to avoid damage. Do not bend or apply excessive force to the suspension wires or the lamp body.
- **Cleaning:** Do not use abrasive cleaners or solvents. Refer to the Maintenance section for proper cleaning instructions.
- **Environment:** This lamp is designed for indoor use only. Do not expose it to moisture, extreme temperatures, or corrosive environments.
- **Modifications:** Do not attempt to modify or disassemble the lamp. This will void the warranty and may pose a safety risk.

3. Package Contents

Please check that all components are present and undamaged before proceeding with installation.

- Big Ivalo LED Metal Pendant Lamp (1 unit)
- Ceiling rose with integrated power cable (1 unit)
- Mounting hardware (screws, anchors)
- Instruction Manual (this document)

4. Setup and Installation

Professional installation by a qualified electrician is highly recommended.

1. **Disconnect Power:** Before starting any installation, ensure the main power supply to the installation area is turned off at the circuit breaker.
2. **Prepare Mounting Location:** Mark the desired location for the ceiling rose. Ensure the mounting surface is structurally sound and can support the weight of the lamp (approximately 1.1 kg).
3. **Install Ceiling Rose:** Secure the ceiling rose to the ceiling using the provided mounting hardware. Ensure all connections are tight and stable.
4. **Electrical Connection:** Connect the lamp's power cable to the household electrical wiring. Follow the standard wiring color codes (e.g., Live, Neutral, Earth). Ensure all connections are secure and properly insulated.
5. **Adjust Suspension Height:** The pendant lamp is suspended by adjustable wires. Carefully adjust the length of the suspension wires to achieve the desired height and level. Ensure the lamp is balanced.
6. **Final Check:** Double-check all connections and ensure the lamp is securely mounted.
7. **Restore Power:** Once installation is complete, restore power at the circuit breaker.



Figure 4.1: Close-up view of the ceiling rose, showing the attachment points for the suspension wires and the electrical connection area. This component secures the lamp to the ceiling.



Figure 4.2: Detail of the thin, adjustable suspension wires attaching to the main circular lamp body. These wires allow for height adjustment during installation.

5. Operating Instructions

This pendant lamp features a CCT (Correlated Color Temperature) selectable system, allowing you to change the light color temperature.

- **Power On/Off:** Use a standard wall switch connected to the lamp's electrical circuit to turn the lamp on or off.
- **CCT Selection:** To change the color temperature (warm white, neutral white, or cool white), simply toggle the wall switch off and on within a short period (typically 1-3 seconds). Each toggle will cycle through the available color temperatures. The lamp will remember the last selected color temperature when turned off for a longer duration.

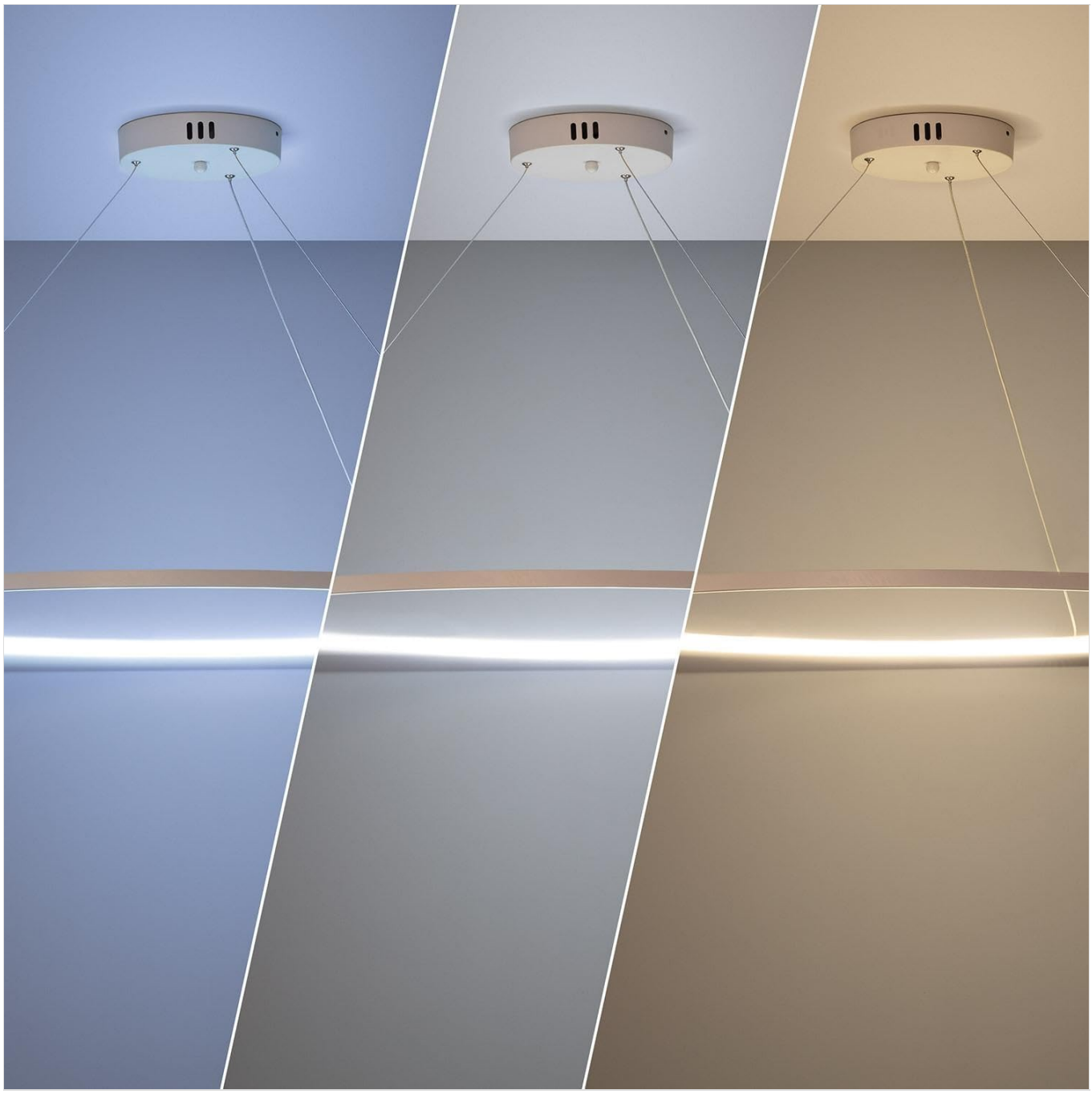

Figure 5.1: Visual representation of the CCT selectable feature, demonstrating the lamp's ability to emit cool white, neutral white, and warm white light.

6. Maintenance

Regular maintenance ensures the longevity and optimal performance of your lamp.

- **Cleaning:** Before cleaning, ensure the power supply to the lamp is disconnected. Use a soft, dry, or slightly damp cloth to wipe the surface of the lamp. Do not use chemical cleaners, abrasive materials, or solvents, as these can damage the finish and electrical components.
- **Inspection:** Periodically inspect the suspension wires and electrical connections for any signs of wear or damage. If any damage is observed, disconnect power immediately and consult a qualified electrician.
- **LEDs:** The integrated LED light source is designed for long-term use and is not user-replaceable.

7. Troubleshooting

If you encounter issues with your lamp, refer to the following troubleshooting guide:

Problem	Possible Cause	Solution
Lamp does not turn on	No power supply Loose electrical connection Faulty wall switch	Check circuit breaker and wall switch. Ensure all electrical connections are secure (consult an electrician). Test the wall switch with another device.
Light flickers	Loose wiring Incompatible dimmer switch (if applicable) Power fluctuations	Check electrical connections (consult an electrician). Ensure a compatible LED dimmer is used, or remove the dimmer. Consult your electricity provider.
CCT selection not working	Incorrect switch toggling speed	Ensure you are toggling the wall switch off and on within 1-3 seconds to cycle through colors.

If the problem persists after attempting these solutions, please contact customer support.

8. Specifications

The following table details the technical specifications of the LEDKIA LIGHTING Big Ivalo Pendant Lamp:

Feature	Specification
Brand	LEDKIA LIGHTING
Model Number	85040_170594
Manufacturer	efectoLED
Product Dimensions (L x W x H)	100 x 100 x 205.5 cm
Item Weight	1.1 Kilograms
Color	White
Material	Aluminum
Style	Minimalist, Modern
Number of Light Sources	1
Bulb Type	Integrated LED
Power	28 Watts
Luminous Flux	3000 lm
CCT (Color Temperature)	Selectable (Warm White, Neutral White, Cool White)
Power Source	Electric Cable
Components Included	Power cable
Batteries Required/Included	No

Feature	Specification
Country of Origin	China

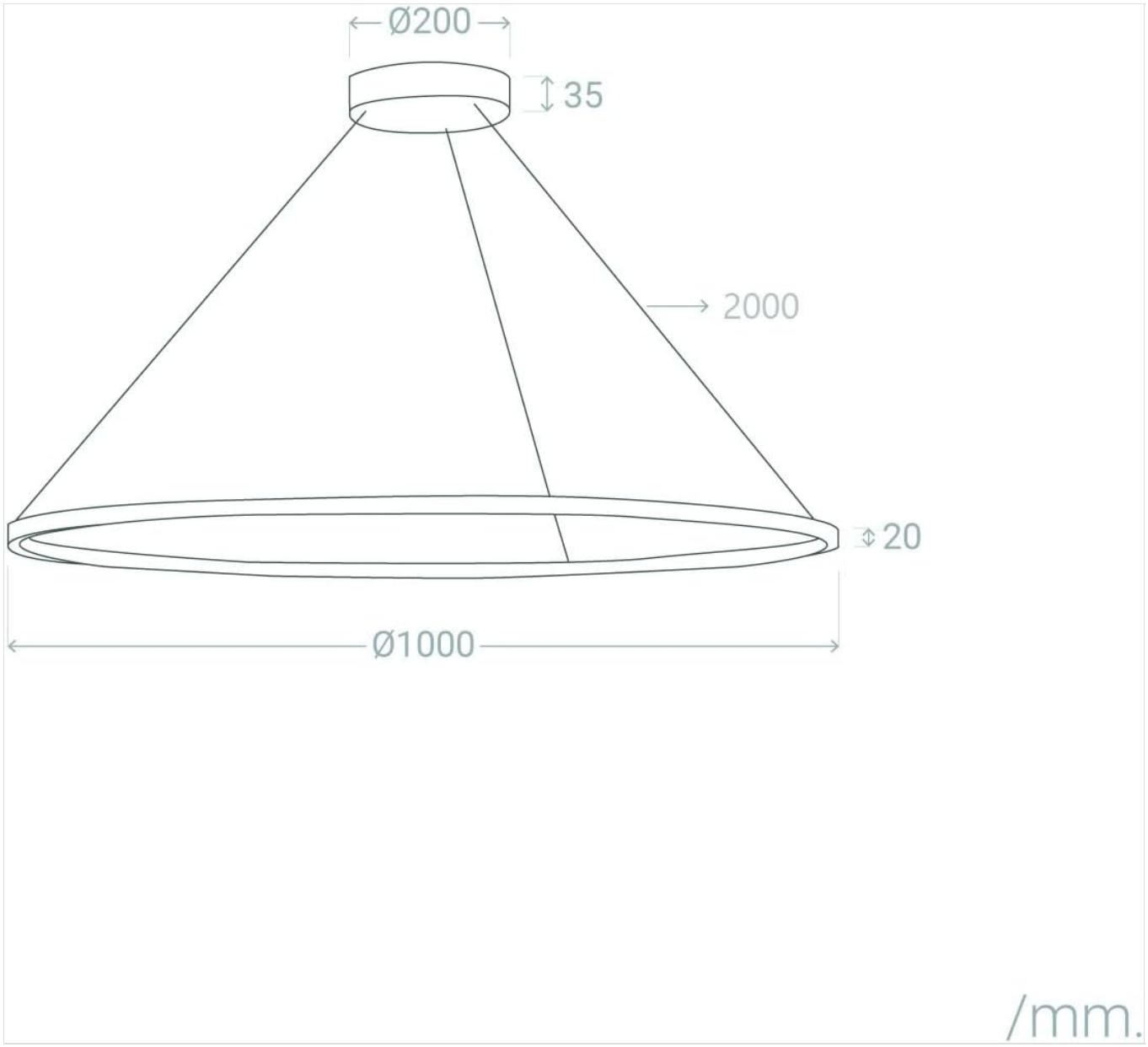

Figure 8.1: Dimensional drawing of the Big Ivalo pendant lamp, indicating key measurements in millimeters.

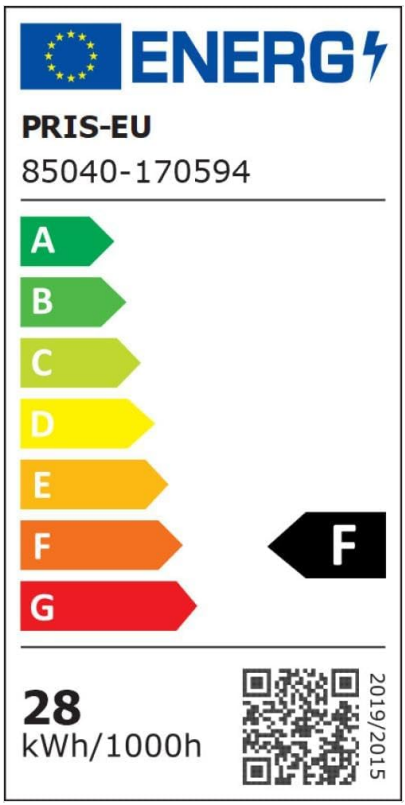

Figure 8.2: EU Energy Label for the product, indicating its energy efficiency class and consumption. For more details, scan the QR code or visit eprel.ec.europa.eu/qr/1214520.

9. Warranty and Support

LEDKIA LIGHTING products are manufactured to high-quality standards and are backed by a standard warranty against manufacturing defects. Please refer to your purchase documentation for specific warranty terms and duration.

For technical support, warranty claims, or any questions regarding your product, please contact LEDKIA LIGHTING customer service through the retailer where you purchased the product or visit the official LEDKIA LIGHTING store online:

LEDKIA LIGHTING Official Store: Visit Store

When contacting support, please have your model number (85040_170594) and proof of purchase readily available.

Ask a question about this manual

Ask about setup, troubleshooting, compatibility, parts, safety, or missing instructions. Manuals+ will review the question and use this page's manual context to help answer it.

Name

Anonymous

Email

you@example.com

After a successful submission, we securely hash the supplied account or form email before sending it to Microsoft Advertising for conversion attribution. Privacy details.

Question

Example: How do I reset this device or fix this error?

Details

Model number, symptoms, what you tried, or the section of the manual you are using.

Submit question

Open the live page

https://manuals.plus/asin/B09RKDH97F

More documents and user manuals: **https://manuals.plus/**