Manuals+
Q & A | Deep Search | Upload

Aigostar AL-RDN035-01

Aigostar LED Ceiling Spotlight with 3 GU10 Bases, Silver

Model: AL-RDN035-01

1. Introduction

Thank you for choosing the Aigostar LED Ceiling Spotlight. This manual provides essential information for the safe installation, operation, and maintenance of your new lighting fixture. Please read these instructions carefully before installation and retain them for future reference.

Image 1.1: Aigostar LED Ceiling Spotlight with 3 GU10 Bases, Silver.

2. Safety Instructions

- **Electrical Safety:** Always disconnect power at the main circuit breaker before installation, maintenance, or bulb replacement.
- **Qualified Electrician:** Installation should be performed by a qualified electrician or competent person if you are unsure.
- **Voltage:** Ensure the supply voltage matches the fixture's requirements (220 Volts).
- **Bulb Type:** Use only GU10 LED bulbs. Do not exceed the maximum wattage specified for the fixture.
- **Environment:** This fixture is rated IP20 for indoor use only. Avoid direct water spray, especially in bathrooms.
- **Heat:** LED spotlights can generate heat. Ensure adequate ventilation and avoid placing flammable materials near the fixture.

3. Package Contents

Verify that all components are present and undamaged before proceeding with installation:

- 1 x Aigostar LED Ceiling Spotlight (3 Bases, Silver)
- 1 x Mounting Bracket
- 2 x Screws
- 2 x Wall Plugs
- 1 x Instruction Manual

Note: GU10 bulbs are not included and must be purchased separately.

4. Setup and Installation

Follow these steps for safe and proper installation:

1. **Power Disconnection:** Turn off the main power supply at the circuit breaker before starting any electrical work.
2. **Marking:** Hold the mounting bracket against the ceiling or wall at the desired installation location. Mark the positions for drilling.
3. **Drilling:** Drill holes at the marked positions. Insert the wall plugs into the drilled holes.
4. **Mounting Bracket Installation:** Secure the mounting bracket to the ceiling/wall using the provided screws.
5. **Wiring:** Connect the household electrical wires to the terminal block on the fixture. Ensure correct polarity (Live to Live, Neutral to Neutral, Earth to Earth).
6. **Fixture Attachment:** Attach the spotlight fixture to the mounting bracket, ensuring it is securely fastened.
7. **Bulb Installation:** Insert GU10 bulbs into each of the three lamp holders. Twist to secure them.
8. **Power Restoration:** Restore power at the main circuit breaker.

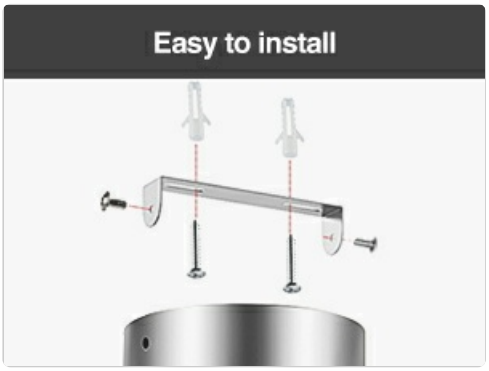

Image 4.1: Installation diagram showing the mounting bracket and screws.

Image 4.2: Illustration of GU10 bulb replacement.

Video 4.1: Product showcase demonstrating installation and use in various settings.

5. Operating Instructions

The Aigostar LED Ceiling Spotlight is designed for flexible illumination:

- **Adjustable Spotlights:** Each of the three GU10 lamp holders can be rotated 350° horizontally and tilted 90° vertically. This allows you to direct light precisely where needed.
- **Dimmable Feature:** The fixture supports dimmable GU10 bulbs (if installed) and can be controlled by a compatible dimmer switch (not included).

Image 5.1: Illustration of the 350° rotatable and 90° adjustable spotlight heads.

6. Maintenance

- **Cleaning:** Ensure the power is off before cleaning. Wipe the fixture with a soft, dry cloth. Do not use abrasive cleaners or solvents.
- **Bulb Replacement:** Disconnect power before replacing bulbs. Allow old bulbs to cool completely. Twist and pull out the old GU10 bulb, then insert and twist the new GU10 bulb into place.
- **Inspection:** Periodically check the fixture for any signs of damage or loose connections.

7. Troubleshooting

Problem	Possible Cause	Solution
Light does not turn on	No power supply Faulty bulb Loose wiring	Check circuit breaker Replace bulb Check wiring connections (with power off)

Problem	Possible Cause	Solution
Light flickers	Loose bulb Incompatible dimmer switch Faulty bulb	Ensure bulb is securely twisted Use a compatible LED dimmer Replace bulb
Fixture gets too hot	Incorrect bulb wattage Poor ventilation	Ensure bulbs do not exceed recommended wattage Ensure fixture is not covered or in an enclosed space

8. Specifications

Feature	Specification
Brand	Aigostar
Model Number	AL-RDN035-01
Dimensions (L x W x H)	31.7 x 13.4 x 11.5 cm
Weight	670 g
Color	Silver
Material	Nickel
Style	Modern
Number of Bulbs	3 (GU10 type, not included)
Voltage	220 Volts
Luminous Flux (with appropriate bulbs)	Up to 2000 lm
Protection Index	IP20
Special Features	Dimmable (with compatible bulbs/switch), Adjustable Angle (350° rotation, 90° tilt)
Power Source	Corded Electric
Indoor/Outdoor Use	Indoor

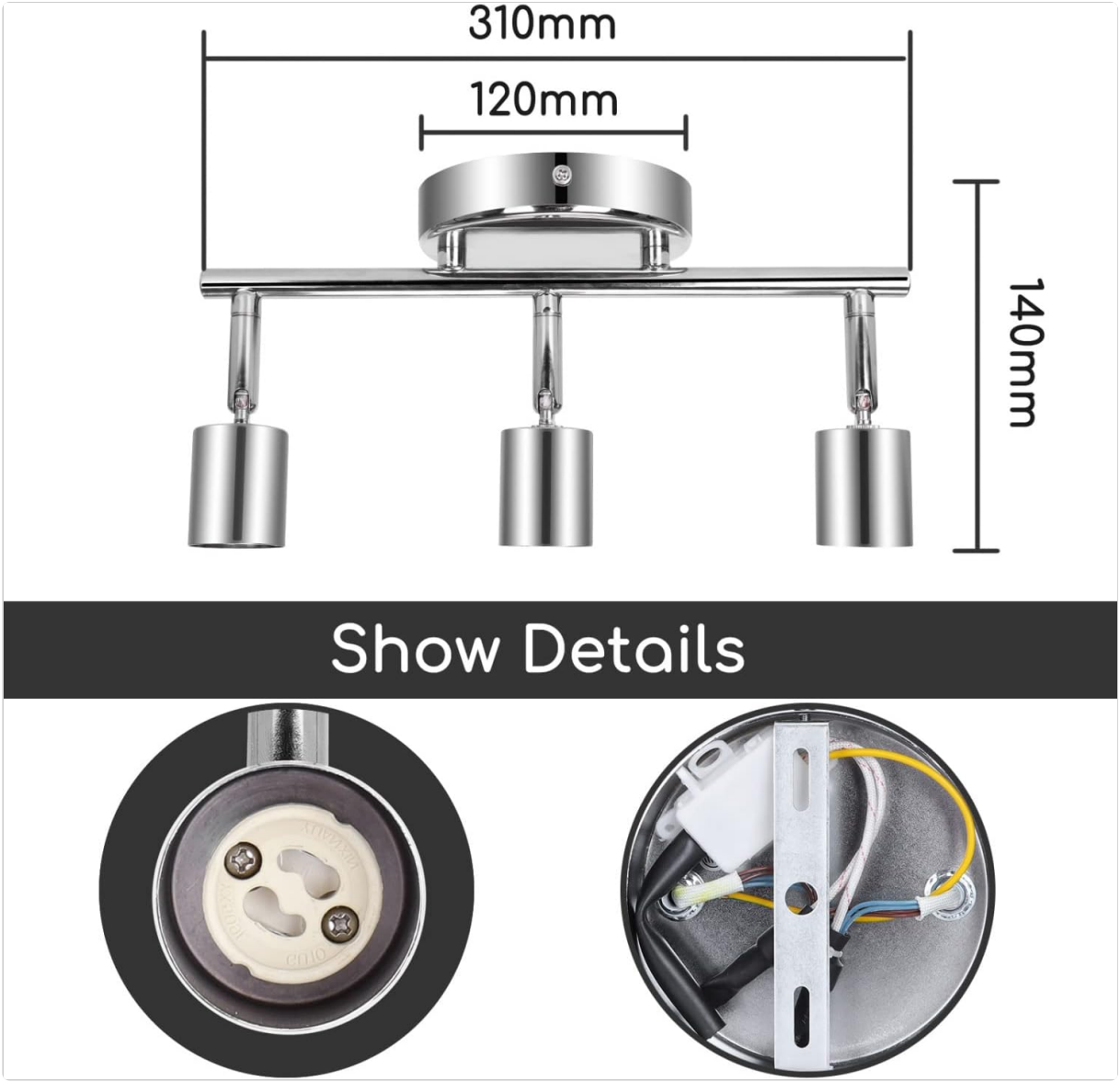

Image 8.1: Product dimensions (310mm length, 120mm base width, 140mm height).

9. Warranty and Support

For warranty information or technical support, please refer to the contact details provided with your purchase documentation or visit the official Aigostar website. Keep your proof of purchase for any warranty claims.