Saved from manuals.plus.
Open the live page for links to other documents and user manuals.

Tecnolite 50LQLEDT65MVN

Tecnolite Zibal IV Outdoor LED Floodlight User Manual

Model: 50LQLEDT65MVN

Introduction

Thank you for choosing the Tecnolite Zibal IV Outdoor LED Floodlight. This manual provides essential information for the safe and efficient installation, operation, and maintenance of your new floodlight. Please read this manual thoroughly before installation and keep it for future reference.



Image: The Tecnolite Zibal IV LED Floodlight shown next to its product packaging, highlighting its design and branding.

Safety Information

Always follow basic safety precautions when installing or using this product to reduce the risk of fire, electric shock, or injury to persons.

- Ensure the power supply is disconnected before installation or maintenance.
- Installation should be performed by a qualified electrician in accordance with local electrical codes.
- Do not operate the floodlight if the housing or cable is damaged.
- Avoid direct eye exposure to the light source when the floodlight is on.
- This product is designed for outdoor use with IP65 protection, but avoid submerging it in water.

Setup and Installation

The Tecnolite Zibal IV floodlight is designed for easy installation on walls, ceilings, or floors. It features an adjustable metal bracket for precise light direction.

Package Contents:

- Tecnolite Zibal IV LED Floodlight
- Mounting accessories (screws, anchors)

- Connection accessories



Image: The Tecnolite Zibal IV LED Floodlight displayed with its mounting hardware, including screws and wire connectors, ready for installation.

Installation Steps:

1. **Choose Location:** Select a suitable outdoor location (garden, patio, corridor, terrace) that provides the desired illumination coverage.
2. **Mark Drilling Points:** Use the floodlight's bracket as a template to mark the drilling points on the mounting surface.
3. **Drill Holes:** Drill holes at the marked points and insert appropriate wall anchors if necessary.
4. **Mount Bracket:** Secure the floodlight's bracket to the surface using the provided screws.
5. **Electrical Connection:**
    - Ensure power is OFF at the circuit breaker.
    - Connect the floodlight's wires to your main power supply wires (Live, Neutral, Ground) using the connection accessories. Ensure all connections are secure and insulated.
6. **Adjust Angle:** Once mounted, adjust the floodlight's angle using the adjustable bracket to direct the light as

needed.

7. **Restore Power:** Turn on the power supply at the circuit breaker.



Image: Close-up of the Tecnolite Zibal IV floodlight's adjustable mounting bracket, illustrating its rotational capability for customized light direction.

Operating Instructions

The Tecnolite Zibal IV LED Floodlight operates immediately upon receiving power. It does not require replacement bulbs.

- **Power On/Off:** Control the floodlight using an external switch connected to its power supply.
- **Light Direction:** The adjustable bracket allows you to manually change the direction of the light beam to illuminate specific areas or objects.
- **Light Angle:** The light has an opening angle of 120°, providing wide coverage.



Image: Visual representation of different light color temperatures (3000K Warm, 4000K Neutral White, 6500K Daylight) demonstrating the potential light output variations, though this specific model is daylight.

Maintenance

The Tecnolite Zibal IV LED Floodlight is designed for durability and minimal maintenance. Its aluminum material with IP65 and IK07 protection ensures resistance against dust, water, and impacts.

- **Cleaning:** Periodically clean the floodlight's surface with a soft, damp cloth. Do not use abrasive cleaners or solvents.
- **Inspection:** Regularly inspect the power cable and housing for any signs of damage. If damage is found, disconnect power and contact a qualified technician for repair or replacement.

- **No Bulb Replacement:** This LED floodlight does not require bulb replacement.



Image: Rear view of the Tecnolite Zibal IV LED Floodlight, showcasing its robust aluminum casing and heat sink fins designed for efficient heat dissipation and durability.

Troubleshooting

If you encounter issues with your Tecnolite Zibal IV floodlight, refer to the following common problems and solutions:

Problem	Possible Cause	Solution

Problem	Possible Cause	Solution
Light does not turn on.	No power supply; Loose wiring; Faulty switch.	Check circuit breaker; Verify all wire connections are secure; Test the switch.
Light flickers.	Unstable power supply; Loose connection.	Ensure stable power; Check and tighten all electrical connections.
Reduced brightness.	Dirt or debris on the lens; End of product lifespan.	Clean the lens with a soft cloth; If product is old, consider replacement.
Water inside the housing.	Improper sealing; Damage to housing.	Disconnect power immediately. Contact support for inspection or replacement.

Specifications

Key technical specifications for the Tecnolite Zibal IV LED Floodlight:

Feature	Detail
Model Number	50LQLEDT65MVN
Power Consumption	50 W
Luminous Flux	4500 Lumens
Light Color Temperature	Daylight (6500K)
Voltage	120V (AC)
Material	Aluminum
Protection Rating	IP65 (Dust and Water Resistant)
Impact Resistance	IK07 (Resistance to 500 grs object impact)
Beam Angle	120°
Lifespan	25,000 hours
Dimensions (LxWxH)	14.99 x 3.48 x 21.49 cm
Weight	750 g

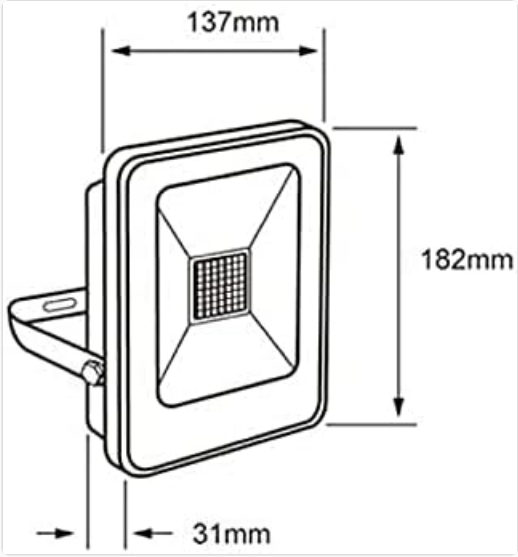

Image: Technical diagram illustrating the dimensions of the Tecnolite Zibal IV LED Floodlight, including length, width, and height measurements in millimeters.

Warranty Information

Tecnolite offers a warranty for its LED products, including the Zibal IV floodlight. The product is covered by a warranty of up to 5 years on LED components.
This warranty covers defects in materials and workmanship under normal use. It does not cover damage resulting from improper installation, misuse, abuse, accidents, or unauthorized repairs.
For warranty claims, please retain your proof of purchase and contact Tecnolite customer support.



Image: A graphic highlighting the "Up to 5 Years Warranty" on Tecnolite LED products, emphasizing product reliability.

Support

For further assistance, technical support, or warranty inquiries, please contact Tecnolite customer service:

- **Website:** Visit the official Tecnolite website for FAQs and support resources.
- **Contact Information:** Refer to the contact details provided on the product packaging or the official Tecnolite website.
- **Online Store:** You can also visit the Tecnolite store on Amazon for product information and support:Tecnolite Amazon Store

© 2025 Tecnolite. All rights reserved.

Ask a question about this manual

Ask about setup, troubleshooting, compatibility, parts, safety, or missing instructions. Manuals+ will review the question and use this page's manual context to help answer it.

Name

Anonymous

Email

you@example.com

After a successful submission, we securely hash the supplied account or form email before sending it to Microsoft Advertising for conversion attribution. Privacy details.

Question

Example: How do I reset this device or fix this error?

Details

Model number, symptoms, what you tried, or the section of the manual you are using.

Submit question

Open the live page

https://manuals.plus/asin/B094C8GTNP

More documents and user manuals: **https://manuals.plus/**