Saved from manuals.plus.
Open the live page for links to other documents and user manuals.

Gardena 09032-20

Gardena Clear Water Submersible Pump 11000 Instruction Manual

Model: 09032-20

1. Introduction

The Gardena Clear Water Submersible Pump 11000 is designed for efficient drainage, repumping, and pumping of clean to slightly dirty water. This manual provides essential information for the safe installation, operation, and maintenance of your pump, ensuring optimal performance and longevity.

Key Features:

- **High Capacity:** Transports up to 11,000 liters per hour with a 450 W motor.
- **Automatic Operation:** Features an adjustable float switch for automatic on/off based on water level, with an option for continuous operation.
- **Flat Suction:** Capable of flat suction down to 2 mm for thorough drainage.
- **Durable Construction:** Equipped with a stainless steel cover and a ceramic sealing system with triple sealing for enhanced durability.
- **Quick Coupling System:** Facilitates easy hose attachment for 25 mm (1 inch) and 38 mm (1 ½ inch) hoses, compatible with G1 inch thread.
- **Ergonomic Design:** Intelligent handle with cable holder for easy transport and storage.

2. Safety Information

Always observe general safety regulations and local safety standards when operating electrical equipment. Failure to follow these instructions may result in electric shock, fire, or serious injury.

- Ensure the power supply matches the voltage specified on the pump's rating label.
- Never operate the pump with a damaged power cord or plug.
- Do not lift or carry the pump by its power cord.
- Always disconnect the pump from the power supply before performing any maintenance or cleaning.
- Keep children and unauthorized persons away from the operating pump.
- Do not use the pump for flammable, corrosive, or explosive liquids.

- Ensure the pump is fully submerged during operation to prevent overheating.

3. Product Overview

The Gardena Clear Water Submersible Pump 11000 is designed for versatility and ease of use. Familiarize yourself with its components before operation.



Image 3.1: Front view of the Gardena Clear Water Submersible Pump 11000, showing the main body, handle, and hose connection.

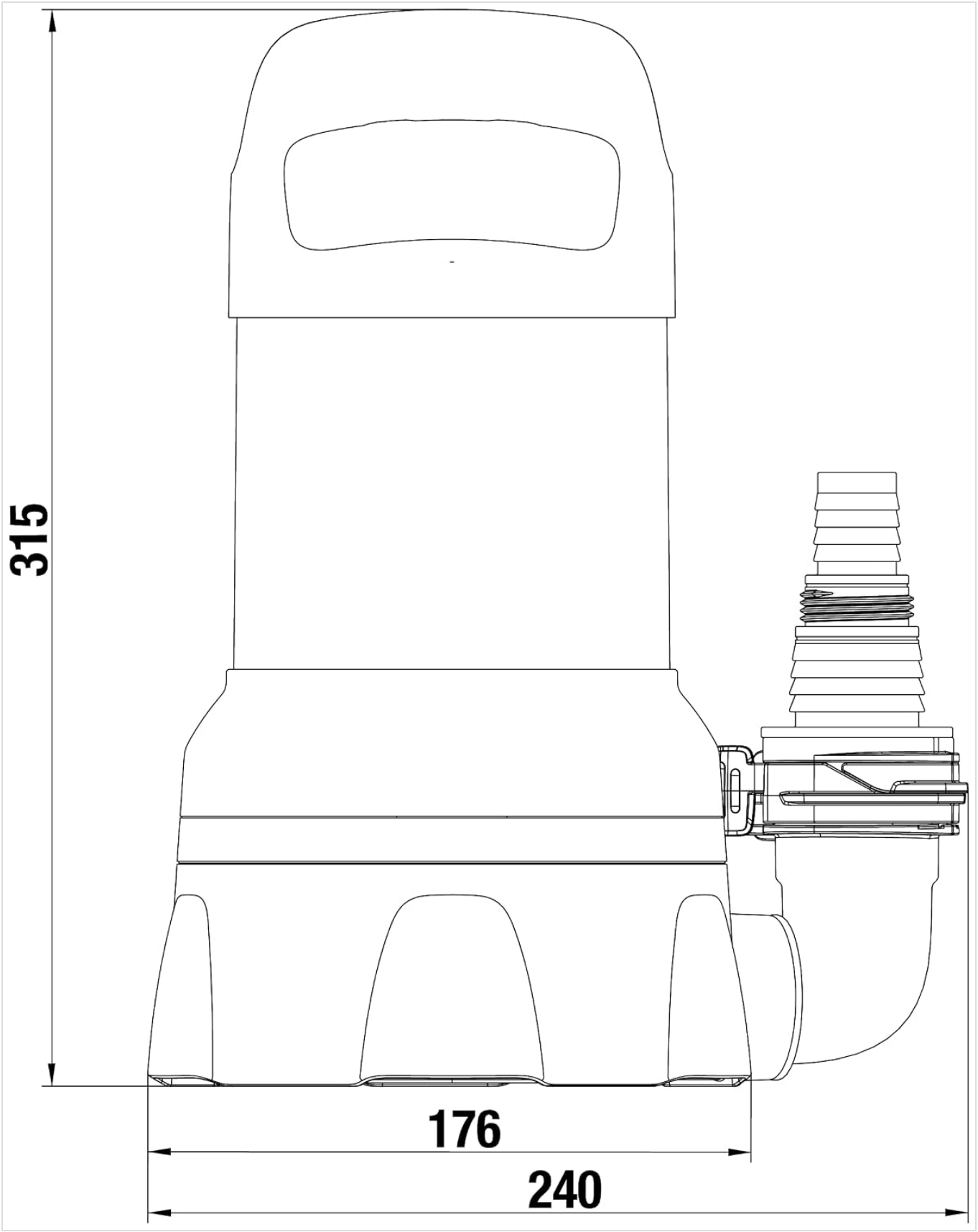

Image 3.2: Angled view of the pump, highlighting the integrated handle and power cable routing.

Main Components:

- **Pump Body:** Contains the motor and impeller.
- **Handle:** For carrying and lowering the pump.
- **Float Switch:** Automatically controls pump operation based on water level.
- **Hose Connection:** Multi-size adapter for various hose diameters.
- **Power Cable:** For electrical connection.

4. Setup

Proper setup is crucial for the pump's performance and safety.

4.1. Hose Connection

1. Attach the appropriate hose adapter to the pump's outlet. The pump features a quick coupling system compatible with 25 mm (1 inch) and 38 mm (1 ½ inch) hoses, and G1 inch thread.
2. Securely connect your discharge hose to the adapter. For optimal flow, larger diameter hoses (e.g., 38 mm / 1 ½ inch) are recommended.



Image 4.1: Detail of the quick coupling system for hose attachment.



Image 4.2: Diagram illustrating recommended hose sizes and connections (1: 10m, 38mm (1½") hose; 2: 19mm (¾") connection).

4.2. Pump Placement

- Place the pump on a stable, level surface in the water to be drained. Ensure it is fully submerged for proper cooling and operation.
- Ensure the discharge hose is routed away from the area to be drained, leading to a suitable disposal point.



Image 4.3: The pump being lowered into water for operation.

4.3. Float Switch Adjustment

The float switch controls the automatic operation of the pump. Adjust its position to set the desired on/off water levels.



Image 4.4: The pump on a tiled surface, showing the float switch and hose connection.

5. Operating Instructions

5.1. Automatic Operation (Float Switch)

1. Ensure the float switch is freely movable and not obstructed.
2. Plug the pump into a grounded power outlet.
3. The pump will automatically start when the water level rises and lifts the float switch to its 'on' position.
4. The pump will stop when the water level drops, causing the float switch to fall to its 'off' position.

5.2. Continuous Operation

For continuous pumping, the float switch can be secured in an upward position. Refer to the pump's specific design for how to lock the float switch for continuous operation.

- **Caution:** In continuous operation, the pump will not automatically shut off. Monitor the water level to prevent dry running, which can damage the pump.

5.3. Performance Overview

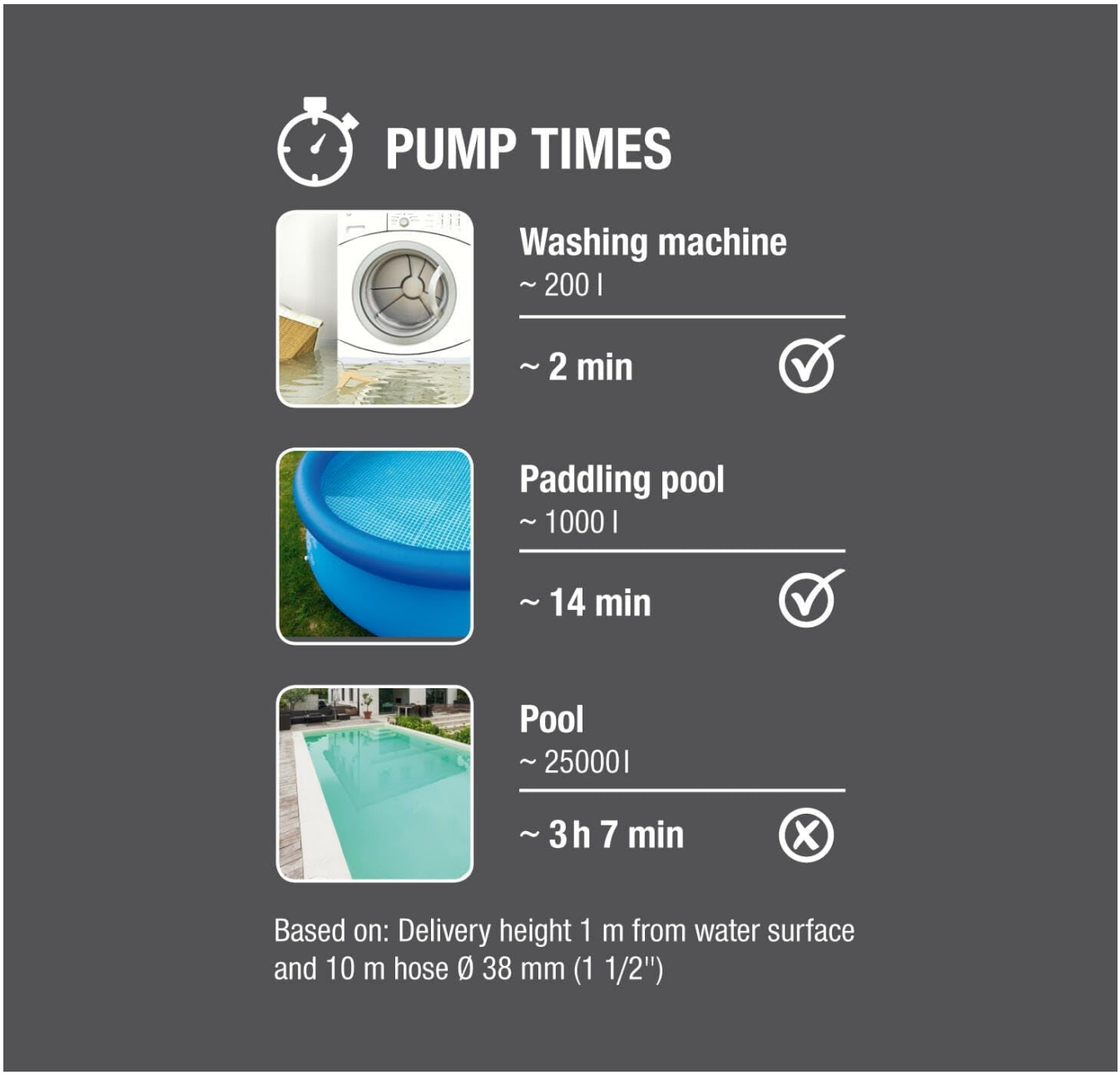

Image 5.1: Diagram illustrating approximate pump times for various volumes (e.g., washing machine, paddling pool, pool) based on a 1m delivery height and 10m, 38mm (1½") hose.

6. Maintenance

Regular maintenance ensures the longevity and efficient operation of your pump.

6.1. Cleaning

1. **Disconnect Power:** Always unplug the pump from the power source before cleaning.
2. **Rinse:** Rinse the pump thoroughly with clean water after each use, especially if pumping dirty water.
3. **Inspect Inlet:** Check the pump inlet for any debris (leaves, sand, etc.) and remove them to prevent blockages.

6.2. Storage

- Drain all water from the pump and hose before storing.
- Store the pump in a dry, frost-free location.
- The intelligent handle with cable holder facilitates neat storage of the power cable.

7. Troubleshooting

If you encounter issues with your Gardena Clear Water Submersible Pump 11000, refer to the following common problems and solutions:

Problem	Possible Cause	Solution
Pump does not start.	No power supply. Float switch not activated. Impeller blocked.	Check power connection. Adjust float switch position. Disconnect power and clear any blockages.
Low flow rate or no water pumped.	Hose kinked or blocked. Inlet clogged. Pump not fully submerged.	Check and clear hose. Clean pump inlet. Ensure pump is fully submerged.
Pump runs but does not pump water.	Air lock in pump. Water level too low.	Tilt pump slightly to release air. Ensure sufficient water level for suction.
Pump stops unexpectedly.	Thermal overload protection activated. Float switch deactivated.	Allow pump to cool down. Check float switch position and water level.

8. Specifications

Technical data for the Gardena Clear Water Submersible Pump 11000 (Model 09032-20):

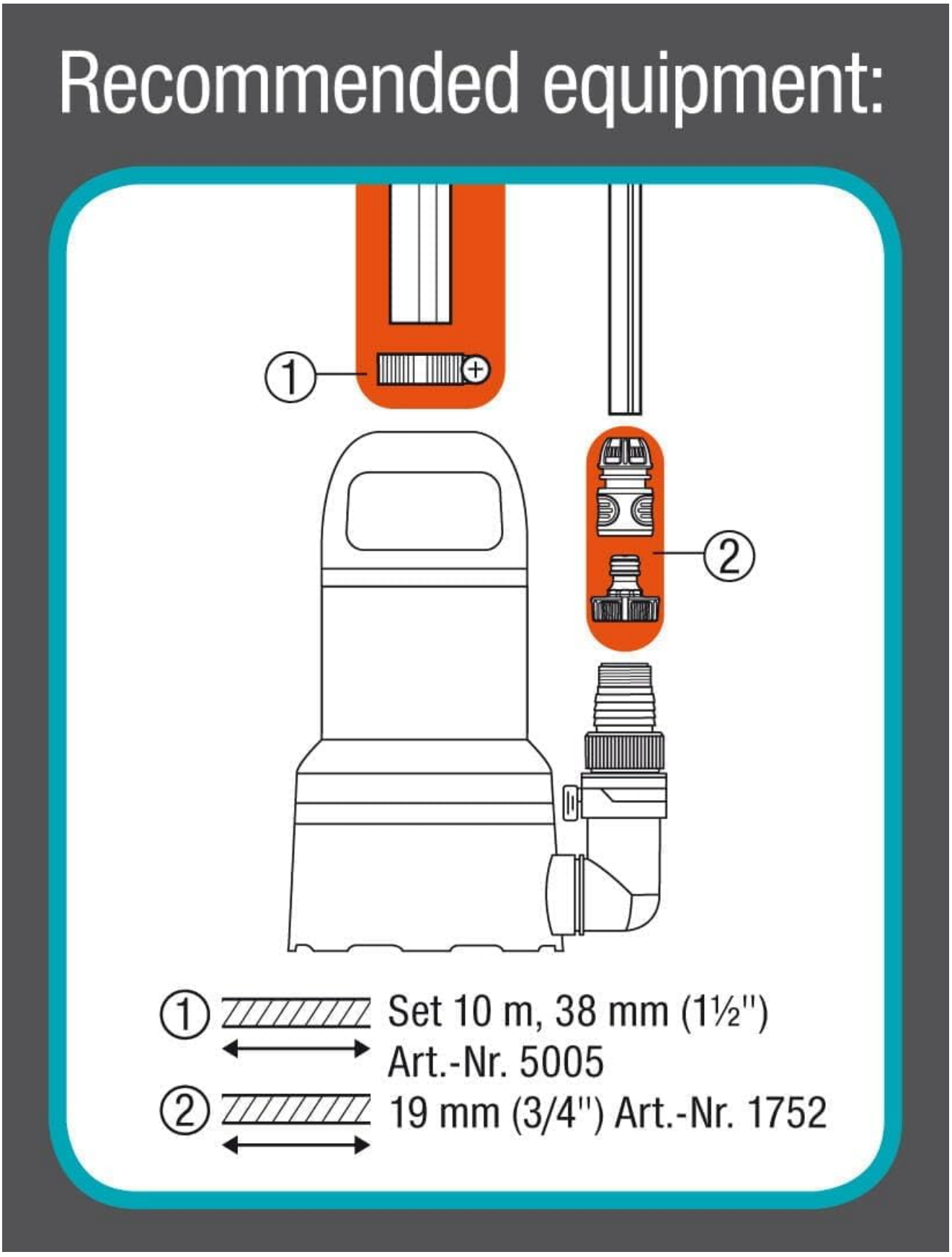

Image 8.1: Technical drawing showing key dimensions of the pump (e.g., 315mm height, 240mm width).

Specification	Value
Brand	Gardena
Model Number	09032-20

Specification	Value
Power	450 W
Maximum Flow Rate	11,000 Liters Per Hour
Maximum Discharge Head	7 m
Maximum Pressure	0.7 bar
Flat Suction	Up to 2 mm
Voltage	230 Volts
Material	Stainless Steel
Item Weight	5525 Grams (approx. 12.18 pounds)
Product Dimensions	10.24 x 8.27 x 15.75 inches (approx. 26 x 21 x 40 cm)
Hose Connections	25 mm (1 inch), 38 mm (1 ½ inch), G1 inch thread

9. Warranty and Support

Gardena products are manufactured to high-quality standards. For information regarding warranty terms and conditions, please refer to the documentation included with your purchase or visit the official Gardena website.
For technical support, spare parts, or service inquiries, please contact Gardena customer service through their official channels. When contacting support, please have your model number (09032-20) and purchase details readily available.

Ask a question about this manual

Ask about setup, troubleshooting, compatibility, parts, safety, or missing instructions. Manuals+ will review the question and use this page's manual context to help answer it.

Name

Anonymous

Email

you@example.com

After a successful submission, we securely hash the supplied account or form email before sending it to Microsoft Advertising for conversion attribution. Privacy details.

Question

Example: How do I reset this device or fix this error?

Details

Model number, symptoms, what you tried, or the section of the manual you are using.

Submit question

Open the live page

https://manuals.plus/asin/B08LNQG8T5

More documents and user manuals: **https://manuals.plus/**