Saved from manuals.plus.
Open the live page for links to other documents and user manuals.

Gardena 9023-20

GARDENA Pressure Tank Unit 3700/4 (Model 9023-20) Instruction Manual

Your guide to safe and efficient operation of your GARDENA water pump.

Introduction Safety Instructions Product Overview Specifications Setup & Installation Operation Maintenance Troubleshooting Storage & Disposal

1. Introduction

Thank you for choosing the GARDENA Pressure Tank Unit 3700/4 (Model 9023-20). This manual provides essential information for the safe and efficient installation, operation, and maintenance of your water pump. Please read these instructions carefully before first use and keep them for future reference.
This unit is designed for pumping clean water from various sources such as rain barrels, wells, or cisterns, for purposes like garden irrigation, increasing water pressure in household plumbing, or supplying water to washing machines and toilets.

2. Safety Instructions

General Safety:

- Always disconnect the power supply before performing any maintenance or cleaning.
- Ensure the pump is placed on a stable, level surface to prevent tipping.
- Do not operate the pump with damaged cables or plugs.
- Keep children and unauthorized persons away from the operating pump.
- The pump is designed for pumping clean water only. Do not pump flammable, corrosive, or explosive liquids.
- Protect the pump from frost.

Electrical Safety:

- Connect the pump only to a properly grounded outlet.
- Ensure the voltage rating on the pump matches your local power supply.
- Do not immerse the motor or electrical components in water.
- An integrated thermal stop switch prevents overheating. If the pump stops, allow it to cool down before restarting.

3. Product Overview

The GARDENA Pressure Tank Unit 3700/4 is a robust and efficient water pump system. It features an 800W motor, a durable glass-fiber reinforced plastic housing, and stainless-steel components for longevity.



Figure 3.1: Front view of the GARDENA Pressure Tank Unit 3700/4. This image shows the main pump body, pressure tank, and control panel.



Figure 3.2: Close-up view of the pump's connections, including the pressure gauge and outlet.

4. Technical Specifications

Model Number	9023-20 (also referred to as 9023-61 in some documentation)
Brand	Gardena
Power Source	Corded Electric
Motor Power	800W
Maximum Flow Rate	3700 Liters Per Hour
Maximum Lifting Height	41 Metres
Maximum Suction Depth	7 Metres
Maximum Pressure	4.1 Bar
Voltage	230 Volts
Material	Plastic (housing), Stainless Steel (components)
Product Dimensions (L x W x H)	18.1L x 11W x 20.1H Centimeters
Item Weight	12500 Grams

5. Setup and Installation

Proper setup is crucial for the optimal performance and longevity of your GARDENA Pressure Tank Unit. Follow these steps carefully:

5.1 Choosing a Location

Place the pump on a firm, level surface, protected from direct weather exposure and frost. Ensure adequate ventilation around the pump.

5.2 Connecting Suction and Pressure Hoses

Connect the suction hose to the inlet port and the pressure hose to the outlet port. Ensure all connections are tight to prevent air leaks, which can affect pump performance.



Figure 5.1: This diagram illustrates the maximum suction depth of 7 meters and a maximum delivery height of 28 meters for typical household applications.



Figure 5.2: Essential equipment for pump setup. Image (1) shows a suction hose with a filter, recommended in 19mm (3/4") or 13mm (1/2") diameters. Image (2) shows a pressure hose, available in 3.5m or 7.0m lengths.

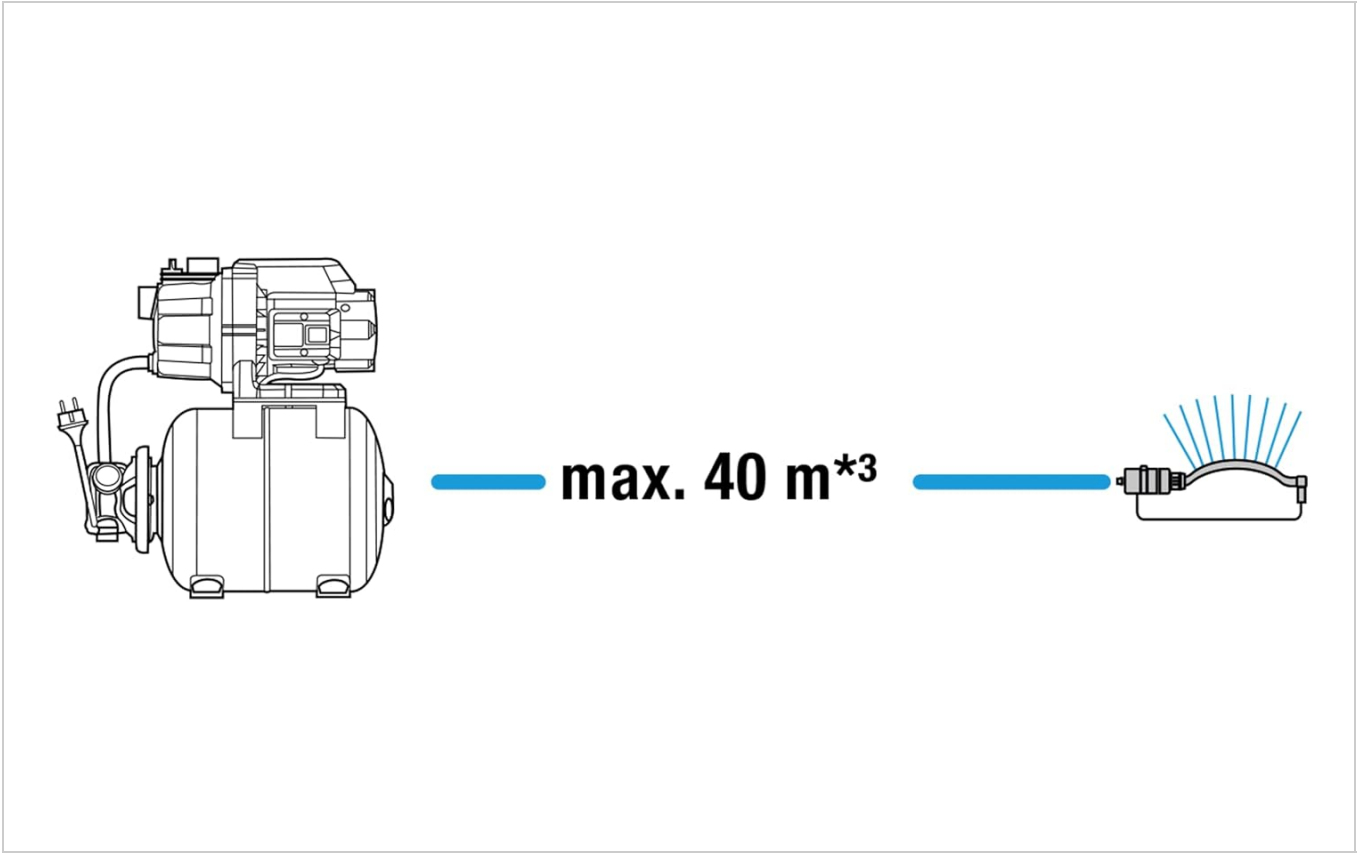

Figure 5.3: This diagram indicates that the pump can support irrigation over a maximum distance of 40 meters to a sprinkler.

5.3 Priming the Pump

Before first use, or if the pump has run dry, it must be primed. Fill the pump housing with water through the designated filling opening until it overflows. Close the opening securely. This ensures the pump can create suction effectively.

5.4 Electrical Connection

Plug the power cord into a grounded electrical outlet. Ensure the power supply matches the pump's voltage requirements (230V).

6. Operation

Once installed and primed, your GARDENA Pressure Tank Unit is ready for operation.

6.1 Starting the Pump

Switch on the pump using the power switch. The pump will begin to draw water and build pressure in the tank. The pressure gauge will indicate the current system pressure.

▶ **Watch video online**

Video 6.1: This video demonstrates the setup and initial operation of a GARDENA pump, showing how to connect hoses, prime the pump, and activate it for garden irrigation.

6.2 Automatic Operation

The pressure tank unit is designed for automatic operation. When water is drawn (e.g., by opening a tap), the pressure in the tank drops, and the pump automatically switches on to replenish the pressure. When water drawing stops and the desired pressure is reached, the pump switches off.

6.3 Stopping the Pump

To stop the pump, switch it off using the power switch. If the pump will not be used for an extended period, disconnect it from the power supply.

7. Maintenance

Regular maintenance ensures the long-term performance and reliability of your pump.

- **Cleaning:** Periodically clean the pump exterior with a damp cloth. Do not use harsh detergents or solvents.
- **Filter Check:** If a pre-filter is installed on the suction line, check and clean it regularly to prevent blockages and maintain flow rate.
- **Frost Protection:** Before the first frost, completely drain the pump and disconnect all hoses. Store the pump in a frost-free environment.
- **Pressure Tank:** The pressure in the tank should be checked periodically (e.g., annually) and adjusted if necessary according to the manufacturer's recommendations. This typically requires a bicycle pump and a pressure gauge.

8. Troubleshooting

This section addresses common issues you might encounter with your GARDENA Pressure Tank Unit.

Problem	Possible Cause	Solution
Pump does not start.	No power supply; Thermal overload switch activated; Motor fault.	Check power connection and fuse. Allow pump to cool down. Contact service if motor fault is suspected.

Pump runs but no water is delivered.	Pump not primed; Air in suction line; Suction hose blocked or leaking; Water source empty.	Prime the pump. Check all suction line connections for leaks. Clear any blockages. Ensure water source has sufficient water.
Pump switches on and off frequently.	Pressure tank pre-charge pressure too low; Leak in the pressure system; Small water draw.	Check and adjust pressure tank pre-charge. Inspect pressure lines for leaks. This can be normal for very small water draws.
Reduced flow rate or pressure.	Partial blockage in suction or pressure line; Filter dirty; Air in the system.	Check and clear hoses. Clean any filters. Re-prime the pump to remove air.

9. Storage and Disposal

9.1 Storage

For storage, especially during winter months, ensure the pump is completely drained of water to prevent frost damage. Disconnect all hoses and store the unit in a dry, frost-free location.

9.2 Disposal

Do not dispose of the product with household waste. It must be disposed of in accordance with local environmental regulations. Return the product to a designated collection point for recycling electrical and electronic equipment.

10. Warranty and Support

GARDENA provides a manufacturer's warranty for this product. For detailed warranty terms and conditions, please refer to the documentation included with your purchase or visit the official GARDENA website. For technical support or spare parts, please contact your local GARDENA service center.

© 2023 GARDENA. All rights reserved. Information subject to change without notice.

Ask a question about this manual

Ask about setup, troubleshooting, compatibility, parts, safety, or missing instructions. Manuals+ will review the question and use this page's manual context to help answer it.

Name

Anonymous

Email

you@example.com

After a successful submission, we securely hash the supplied account or form email before sending it to Microsoft Advertising for conversion attribution. Privacy details.

Question

Example: How do I reset this device or fix this error?

Details

Model number, symptoms, what you tried, or the section of the manual you are using.

Submit question

Open the live page

https://manuals.plus/asin/B08LNQ98RD

More documents and user manuals: **https://manuals.plus/**