Saved from manuals.plus.
Open the live page for links to other documents and user manuals.

La Crosse Technology 328-96087-INT

La Crosse Technology 328-96087-INT Professional Weather Station User Manual

Model: 328-96087-INT

1. Introduction

The La Crosse Technology 328-96087-INT is a professional-grade weather station designed for comprehensive home weather monitoring. This system provides real-time data for indoor and outdoor temperature, humidity, wind speed and direction, rainfall, and barometric pressure. It features a user-friendly display and wireless sensors for convenient placement.



Figure 1.1: Overview of the La Crosse Technology 328-96087-INT Professional Weather Station components, highlighting the display unit, wind sensor, and rain sensor, along with its wireless capabilities and battery power source.

2. Package Contents

- Professional Weather Station Display Unit
- TX145WSDTHv3 Breeze Pro Wind Sensor
- TX145R Rain Sensor
- User Manual (this document)

3. Setup

3.1 Battery Installation

Batteries are not included and must be purchased separately. Use new alkaline batteries for optimal performance.

1. **Display Unit:** Open the battery compartment on the back of the display unit. Insert 3 AA alkaline batteries, observing the correct polarity (+/-).
2. **TX145WSDTHv3 Breeze Pro Wind Sensor:** Open the battery compartment. Insert 3 AA alkaline batteries, observing the correct polarity (+/-).
3. **TX145R Rain Sensor:** Open the battery compartment. Insert 2 AA alkaline batteries, observing the correct polarity (+/-).



Figure 3.1: Rear view of the display unit, illustrating the battery compartment and control buttons.

3.2 Sensor Placement

For accurate readings, proper sensor placement is crucial. The wireless transmission range is up to 330 feet (100 meters) in open air.

- **Wind Sensor:** Mount the wind sensor in an open area, free from obstructions like trees or buildings, to ensure accurate wind speed and direction measurements.
- **Rain Sensor:** Place the rain sensor on a level surface in an open area, away from overhead obstructions that could block rainfall.

3.3 Display Unit Placement

The display unit can be placed on a countertop using its integrated stand or mounted on a wall.

- **Countertop:** Extend the full-range stand on the back of the unit to position it on a flat surface.
- **Wall Mount:** Use the wall hanging mounting holes on the back of the unit to secure it to a wall.



Figure 3.2: Examples of display unit placement: wall-mounted and countertop.

3.4 Initial Power-Up and Sensor Connection

After installing batteries in all components, the display unit will automatically search for the sensors. Allow a few minutes for the sensors to connect and transmit data. Ensure the sensors are within range of the display unit.

4. Operation

4.1 Understanding the Display

The high-contrast black and white screen displays various weather parameters. The main display areas include:

- **Time and Date:** Atomic time and date synchronization.
- **Indoor Temperature & Humidity:** Current readings inside.
- **Outdoor Temperature & Humidity:** Current readings from the outdoor sensor.
- **Wind Speed & Direction:** Current and top wind speeds, displayed with a compass rose, cardinal direction, or degrees.
- **Rainfall:** Accumulated rainfall data.
- **Forecast Icons:** 6 dynamic icons with tendency indicators for weather prediction.
- **Barometric Pressure:** Current pressure readings with tendency indicators.



Figure 4.1: Detailed view of the display screen, highlighting key information areas.

4.2 Navigation Buttons

The buttons on the top and back of the display unit allow for navigation and settings adjustments:

- **ALERTS:** Hold to set alert values. Press to arm/disarm alerts.

- **PRESSURE:** Press to change displayed info. Hold for set pressure value.
- **SET:** Press to view H/L/D records. Hold to enter settings menu. Hold minus to delete reading.
- **TEMP:** Press to view H/L/D records. Hold minus to delete reading.
- **WIND:** Press for wind speed history (1 hour, 24 hours, 7 days, month, year). Hold minus to delete record.
- **RAIN:** Press for history or to cycle info. Hold minus to delete record.

4.3 Viewing History and Records

The weather station stores historical data for various parameters:

- **Wind History:** View wind speed records for the last hour, 24 hours, 7 days, month, and year by pressing the **WIND** button.
- **Rainfall History:** Access accumulated rainfall data from the past hour up to the last year, and total since last reset, using the **RAIN** button.
- **Temperature/Humidity Records:** View daily high/low records for indoor and outdoor temperature and humidity using the **TEMP** button.

4.4 Setting Alerts

Customize alerts for specific weather conditions:

1. Press and hold the **ALERTS** button to enter alert setting mode.
2. Use the navigation buttons to select the parameter (e.g., wind speed, temperature, rainfall) and set the desired alert value.
3. Press **ALERTS** again to confirm and arm the alert.

5. Maintenance

5.1 Battery Replacement

Replace batteries in the display unit and sensors annually, or when the low battery indicator appears on the display. Always replace all batteries in a unit at the same time with new, fresh batteries.

5.2 Sensor Cleaning

- **Rain Sensor:** Periodically check the rain gauge for debris (leaves, insects) that may obstruct the tipping bucket mechanism. Clean gently with a soft cloth and water.
- **Wind Sensor:** Ensure the wind cups and wind vane rotate freely. Remove any obstructions.
- **General:** Wipe down all components with a damp cloth as needed. Avoid abrasive cleaners.

6. Troubleshooting

Issue	Possible Cause	Solution
No outdoor data (dashes on display)	Sensors out of range; low sensor batteries; interference.	Move sensors closer to the display; replace sensor batteries; relocate sensors away from electronic devices.
Inaccurate temperature/humidity	Sensor exposed to direct sunlight or heat source; poor airflow.	Relocate sensor to a shaded area with good air circulation.

Issue	Possible Cause	Solution
Inaccurate rainfall	Rain gauge obstructed; not level.	Clear debris from rain gauge; ensure sensor is on a level surface.
Atomic time not syncing	Interference; weak signal.	Place display near a window; avoid electronic interference; allow overnight for synchronization.

7. Specifications

Parameter	Value
Model Number	328-96087-INT
Product Dimensions (Display)	22.81 x 2.54 x 13.79 cm (8.98 x 1.00 x 5.43 inches)
Outdoor Temperature Range	-40°F to 140°F (-29°C to 60°C)
Humidity Range	10% to 99% RH
Wind Speed Range	Up to 111 mph
Rainfall Measurement	Up to 393.6 inches (9999mm)
Wireless Transmission Range	Up to 330 feet (100 meters) in open air
Display Power Requirements	3 AA alkaline batteries (not included)
Wind Sensor Power Requirements	3 AA alkaline batteries (not included)
Rain Sensor Power Requirements	2 AA alkaline batteries (not included)
Connectivity Technology	Wireless
Display Type	LCD

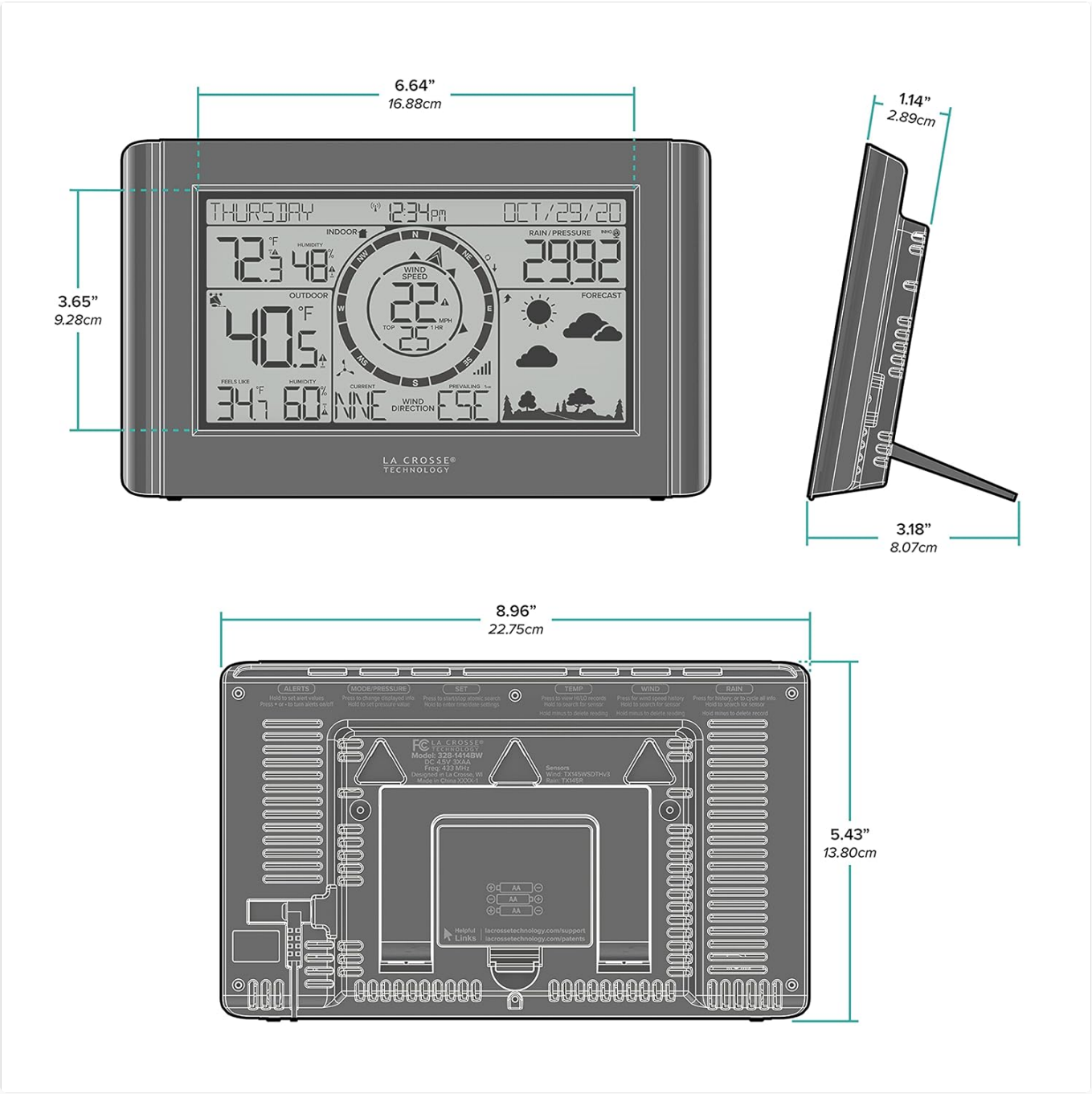

Figure 7.1: Dimensions of the display unit.

8. Warranty and Support

La Crosse Technology products are designed for reliability and performance. For product support, troubleshooting assistance, or warranty information, please visit the official La Crosse Technology support website or contact their customer service department. Keep your purchase receipt as proof of purchase for any warranty claims.

For additional resources and support, you may visit:lacrossetechnology.com/support

© 2024 La Crosse Technology. All rights reserved.

Ask a question about this manual

Ask about setup, troubleshooting, compatibility, parts, safety, or missing instructions. Manuals+ will review the question and use this page's manual context to help answer it.

Name

Anonymous

Email

you@example.com

After a successful submission, we securely hash the supplied account or form email before sending it to Microsoft Advertising for conversion attribution. Privacy details.

Question

Example: How do I reset this device or fix this error?

Details

Model number, symptoms, what you tried, or the section of the manual you are using.

Submit question

Open the live page

https://manuals.plus/asin/B08L5K9P1K

More documents and user manuals: **https://manuals.plus/**