Saved from manuals.plus.
Open the live page for links to other documents and user manuals.

Aideepen W3230

Aideepen W3230 Digital Thermostat 12V 20A Instruction Manual

Model: W3230

Introduction

This manual provides detailed instructions for the installation, operation, and maintenance of the Aideepen W3230 Digital Thermostat. This device is designed for precise temperature control in various applications, offering both heating and cooling modes. Please read this manual thoroughly before use to ensure proper functionality and safety.

Product Overview

The Aideepen W3230 is a versatile digital temperature controller featuring a clear LED display and intuitive controls. It includes a temperature sensor for accurate readings and supports a wide temperature control range.



Front view of the Aideepen W3230 digital thermostat, showing its black casing, red and blue LED displays, and control buttons. A temperature sensor with a black cable is also visible.

Dimensions



An image illustrating the physical dimensions of the Aideepen W3230 digital thermostat (79mm length, 43mm width, 26mm height) and the 1-meter (3.2ft) length of its temperature sensor cable.

Control Panel

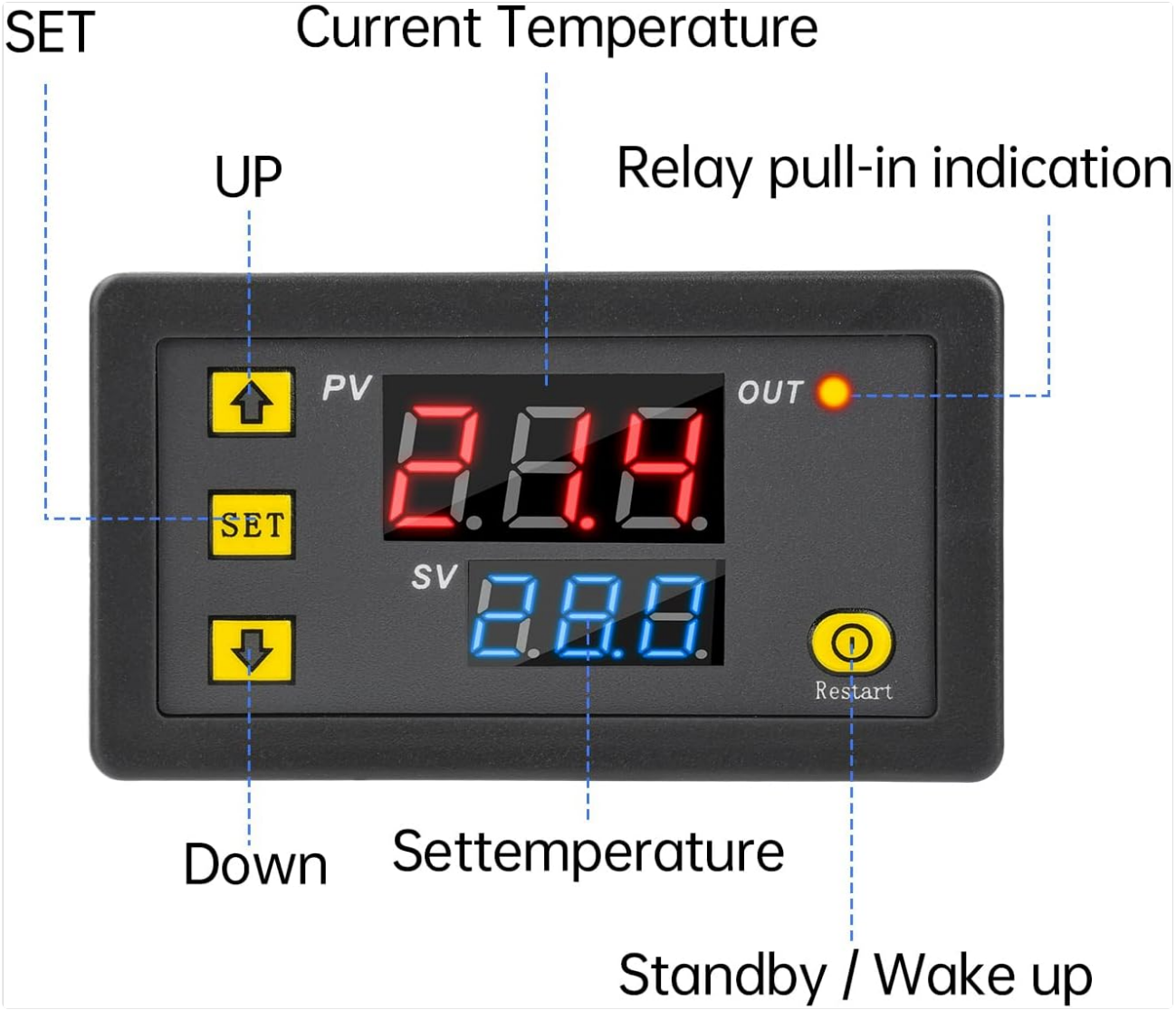

A close-up view of the thermostat's control panel, highlighting the 'SET', 'UP' (arrow up), and 'DOWN' (arrow down) buttons. It also labels the 'PV' (Current Temperature) and 'SV' (Set Temperature) displays, the 'OUT' relay pull-in indicator, and the 'Restart' button.

Specifications

Feature	Specification
Model	W3230
Power Input	DC 12V
Temperature Control Range	-55°C to 120°C
Temperature Measurement Accuracy	0.1°C
Refresh Rate	Approximately 0.5s
Sensor Wire Length	1 meter
Product Dimensions (L x W x H)	79 x 43 x 26 mm
Cut-out Dimensions	76 x 39 mm
Manufacturer	Aideepen

Material	Polycarbonate (PC)
Item Weight	50 Grams
Display Type	LCD
Included Components	1 W3230 Digital Temperature Controller, 1 Instruction Manual

Setup

Wiring Diagram

Proper wiring is crucial for the safe and correct operation of the thermostat. Refer to the diagrams below for connection instructions.

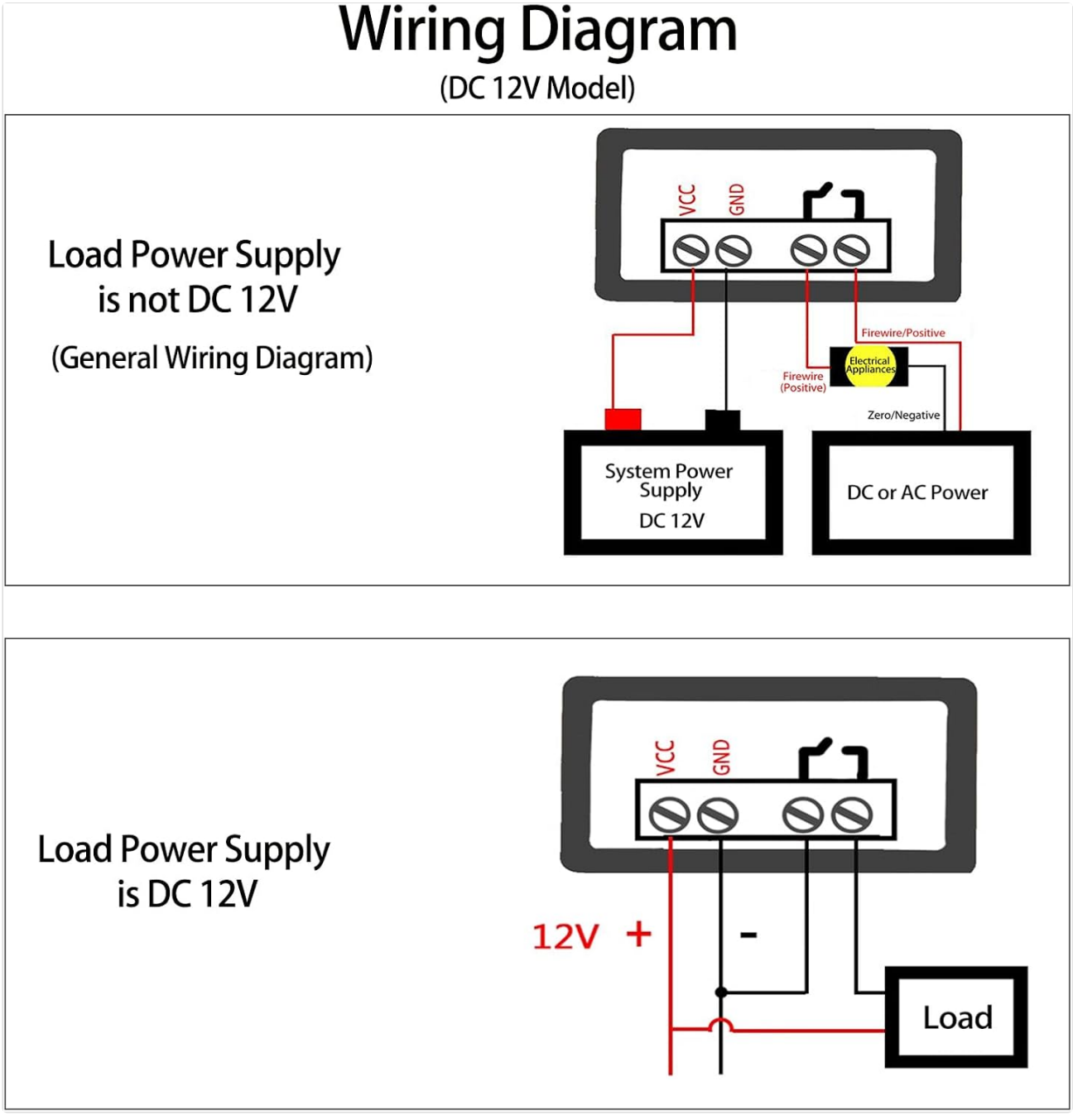

Two wiring diagrams for the DC 12V model. The top diagram shows general wiring when the load power supply is not DC 12V, connecting to a system power supply and DC or AC power. The bottom diagram shows wiring when the load power supply is DC 12V, directly connecting to the load.

Important Wiring Notes:

- Ensure all power is disconnected before performing any wiring.
- Connect the DC 12V power supply to the VCC and GND terminals.
- Connect the load (heating or cooling device) to the output terminals as shown in the diagram, ensuring correct polarity if applicable.
- The temperature sensor should be connected to the designated sensor input.

Initial Configuration

1. After wiring, apply power to the thermostat. The current temperature (PV) and set temperature (SV) will be displayed.
2. To set the desired temperature, press the **SET** button once. The SV display will flash.
3. Use the **UP** and **DOWN** arrow buttons to adjust the set temperature.
4. Press **SET** again to confirm the setting, or wait a few seconds for it to save automatically.

Operating Instructions

The W3230 thermostat offers 10 programmable functions (P0-P9) to customize its operation. To access these settings, press and hold the **SET** button for approximately 3 seconds until 'P0' appears on the display.

10 Function Settings

P0	℃/℉ Switch
P1	Cooling C/H heating Switch
P2	Hysteresis Setting 0.1-30℃
P3	Maximum Temperature Setting Upper Limit 120℃
P4	Minimum Temperature Lower Limit -55℃
P5	Temperature Calibration
P6	Delay Start Time (unit: minutes) 0-10min
P7	Alarm Temperature Setting -55~120℃
P8	Data Lock Function ON/OFF
P9	Restore Factory Settings

A table listing the 10 programmable functions (P0-P9) of the thermostat, including °C/°F Switch, Cooling/Heating Switch, Hysteresis Setting, Maximum/Minimum Temperature Limits, Temperature Calibration, Delay Start Time, Alarm Temperature Setting, Data Lock Function, and Restore Factory Settings.

Parameter Settings (P0-P9)

Use the **UP** and **DOWN** buttons to navigate through the parameters (P0-P9). Press **SET** to enter a parameter's setting, adjust with **UP**/**DOWN**, and press **SET** again to save.

- **P0: °C/°F Switch**
  Selects the temperature unit: Celsius (°C) or Fahrenheit (°F).
- **P1: Cooling/Heating Switch (C/H)**
  Sets the operating mode:
  - **H (Heating Mode):** The output activates when the current temperature is below the set temperature minus the hysteresis. It deactivates when the current temperature reaches the set temperature.
  - **C (Cooling Mode):** The output activates when the current temperature is above the set temperature plus the hysteresis. It deactivates when the current temperature reaches the set temperature.
- **P2: Hysteresis Setting (0.1-30°C)**
  Defines the temperature difference between the activation and deactivation points to prevent rapid cycling of the output.
- **P3: Maximum Temperature Setting Upper Limit (120°C)**
  Sets the highest temperature that can be set as the target temperature (SV).
- **P4: Minimum Temperature Lower Limit (-55°C)**
  Sets the lowest temperature that can be set as the target temperature (SV).
- **P5: Temperature Calibration**
  Allows adjustment of the measured temperature if there is a deviation from an accurate reference thermometer.
- **P6: Delay Start Time (0-10 minutes)**
  Sets a delay before the output activates after the conditions are met. Useful for protecting compressors in cooling systems.
- **P7: Alarm Temperature Setting (-55~120°C)**
  Sets a temperature threshold at which an alarm will be triggered.
- **P8: Data Lock Function (ON/OFF)**
  When ON, prevents accidental changes to settings.
- **P9: Restore Factory Settings**
  Resets all parameters to their default values.

Maintenance

The Aideepen W3230 Digital Thermostat requires minimal maintenance. Follow these guidelines to ensure longevity and accurate performance:

- **Cleaning:** Wipe the device with a soft, dry cloth. Do not use abrasive cleaners or solvents.
- **Sensor Care:** Ensure the temperature sensor is clean and free from debris. Avoid bending or damaging the sensor cable.
- **Environmental Conditions:** Operate the thermostat within its specified temperature and humidity ranges. Avoid exposure to direct sunlight, excessive moisture, or corrosive environments.
- **Connections:** Periodically check wiring connections to ensure they are secure and free from corrosion.

Troubleshooting

If you encounter issues with your Aideepen W3230 Digital Thermostat, refer to the following common problems and solutions:

Problem	Possible Cause	Solution
Display is blank or not powering on.	No power supply or incorrect wiring.	Check power connections (DC 12V) and ensure correct polarity. Verify power source is active.
Temperature reading is inaccurate.	Sensor fault or needs calibration.	Check sensor connection. Perform temperature calibration (P5) using a known accurate thermometer. Replace sensor if damaged.
Output (heating/cooling) not activating.	Incorrect mode (P1), set temperature, or hysteresis (P2). Delay start time (P6) active. Data lock (P8) enabled.	Verify P1 is set to the correct mode (H for heating, C for cooling). Adjust set temperature and hysteresis. Check P6 for delay. Disable P8 if settings need modification.
Thermostat cycles too frequently.	Hysteresis (P2) value is too low.	Increase the hysteresis value (P2) to create a larger temperature differential before activation/deactivation.
Cannot change settings.	Data lock function (P8) is enabled.	Disable the data lock function (P8) to allow changes.

If the problem persists after attempting these solutions, please refer to the official manual or contact customer support.

Warranty and Support

For specific warranty information, please refer to the documentation included with your purchase or contact Aideepen customer support. General support and additional resources may be available through the manufacturer's website.
A detailed manual can be downloaded from:Aideepen W3230 User Manual (PDF)

Ask a question about this manual

Ask about setup, troubleshooting, compatibility, parts, safety, or missing instructions. Manuals+ will review the question and use this page's manual context to help answer it.

Name

Anonymous

Email

you@example.com

After a successful submission, we securely hash the supplied account or form email before sending it to Microsoft Advertising for conversion attribution. Privacy details.

Question

Example: How do I reset this device or fix this error?

Details

Model number, symptoms, what you tried, or the section of the manual you are using.

Submit question

Open the live page

https://manuals.plus/asin/B08DD9LNZL

More documents and user manuals: **https://manuals.plus/**