Saved from manuals.plus.
Open the live page for links to other documents and user manuals.

WEN JN8504

WEN JN8504 8.5-Amp Plate and Biscuit Joiner Instruction Manual

Model: JN8504

Introduction

This manual provides essential information for the safe operation, setup, maintenance, and troubleshooting of your WEN JN8504 8.5-Amp Plate and Biscuit Joiner. Please read and understand all instructions before using the tool to ensure safe and efficient performance. This tool is designed for creating strong, precise joints in various woodworking applications.

General Safety Instructions

WARNING: Always follow basic safety precautions when using electric tools to reduce the risk of fire, electric shock, and personal injury.

- **Work Area Safety:** Keep your work area clean and well-lit. Cluttered or dark areas invite accidents. Do not operate power tools in explosive atmospheres, such as in the presence of flammable liquids, gases, or dust.
- **Electrical Safety:** Power tool plugs must match the outlet. Never modify the plug in any way. Do not use any adapter plugs with grounded power tools. Avoid body contact with grounded surfaces such as pipes, radiators, ranges, and refrigerators.
- **Personal Safety:** Always wear eye protection (safety glasses or goggles) and hearing protection. Use a dust mask if operations create dust. Dress properly; avoid loose clothing or jewelry that can get caught in moving parts.
- **Tool Use and Care:** Do not force the power tool. Use the correct power tool for your application. Disconnect the plug from the power source before making any adjustments, changing accessories, or storing power tools.
- **Maintenance:** Maintain power tools. Check for misalignment or binding of moving parts, breakage of parts, and any other condition that may affect the power tool's operation.

For a comprehensive list of safety guidelines, refer to the official WEN safety manual or visit the WEN Store.

Product Components

Your WEN JN8504 Plate and Biscuit Joiner package includes the following items:

- WEN JN8504 8.5-Amp Plate and Biscuit Joiner
- 4-inch Carbide-Tipped Blade (pre-installed or included separately)

- Detachable Dust Bag
- 24 x #20 Wood Biscuits
- 16 x #10 Wood Biscuits
- 10 x #0 Wood Biscuits
- Blow Mold Carrying Case
- Blade Wrench (for blade changes)



Image: The WEN JN8504 Plate and Biscuit Joiner, showcasing its main body, handles, and adjustable fence. This image represents the complete tool as it appears out of the case.

Setup

1. Attaching the Dust Bag

For cleaner operation and to collect wood chips, attach the detachable dust bag to the dust port located on the side of the joiner. Ensure it is securely fastened to prevent it from detaching during use.



Image: The WEN JN8504 Plate and Biscuit Joiner shown with the black detachable dust bag connected to the dust extraction port at the rear of the tool.

2. Adjusting the Fence Angle

The fence can be adjusted to angles between 0 and 90 degrees for various joint types, including miter joints. Loosen the angle adjustment knob, set the desired angle using the scale, and then tighten the knob firmly.

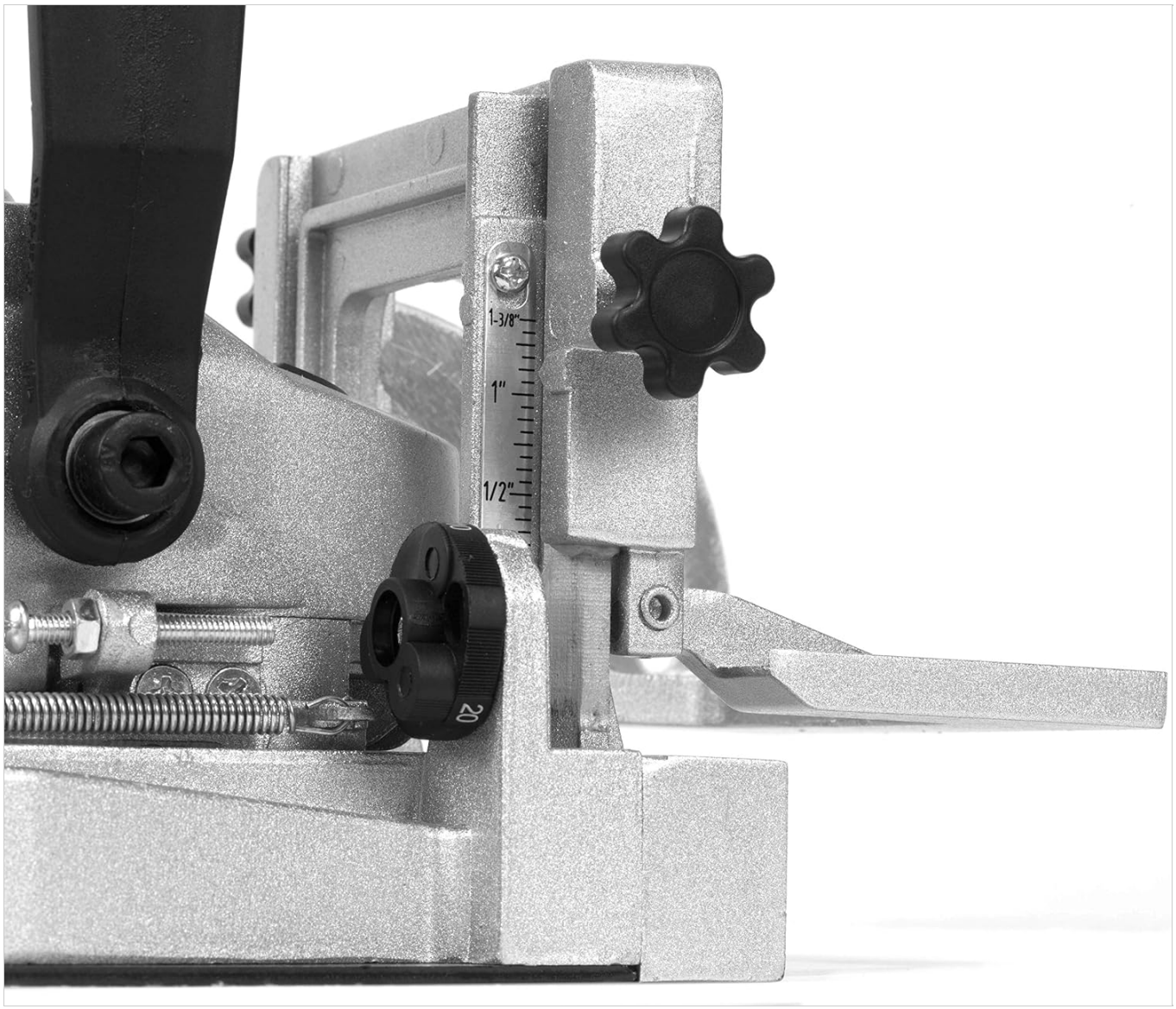

Image: A detailed view of the angle adjustment mechanism on the WEN JN8504, showing the protractor-style scale with markings from 0 to 90 degrees and the black adjustment knob.

3. Setting the Cutting Depth

The cutting depth can be set using pre-set stops for standard #0, #10, and #20 biscuits, or manually adjusted for custom sizes. Rotate the depth adjustment knob to align with the desired biscuit size or measurement.

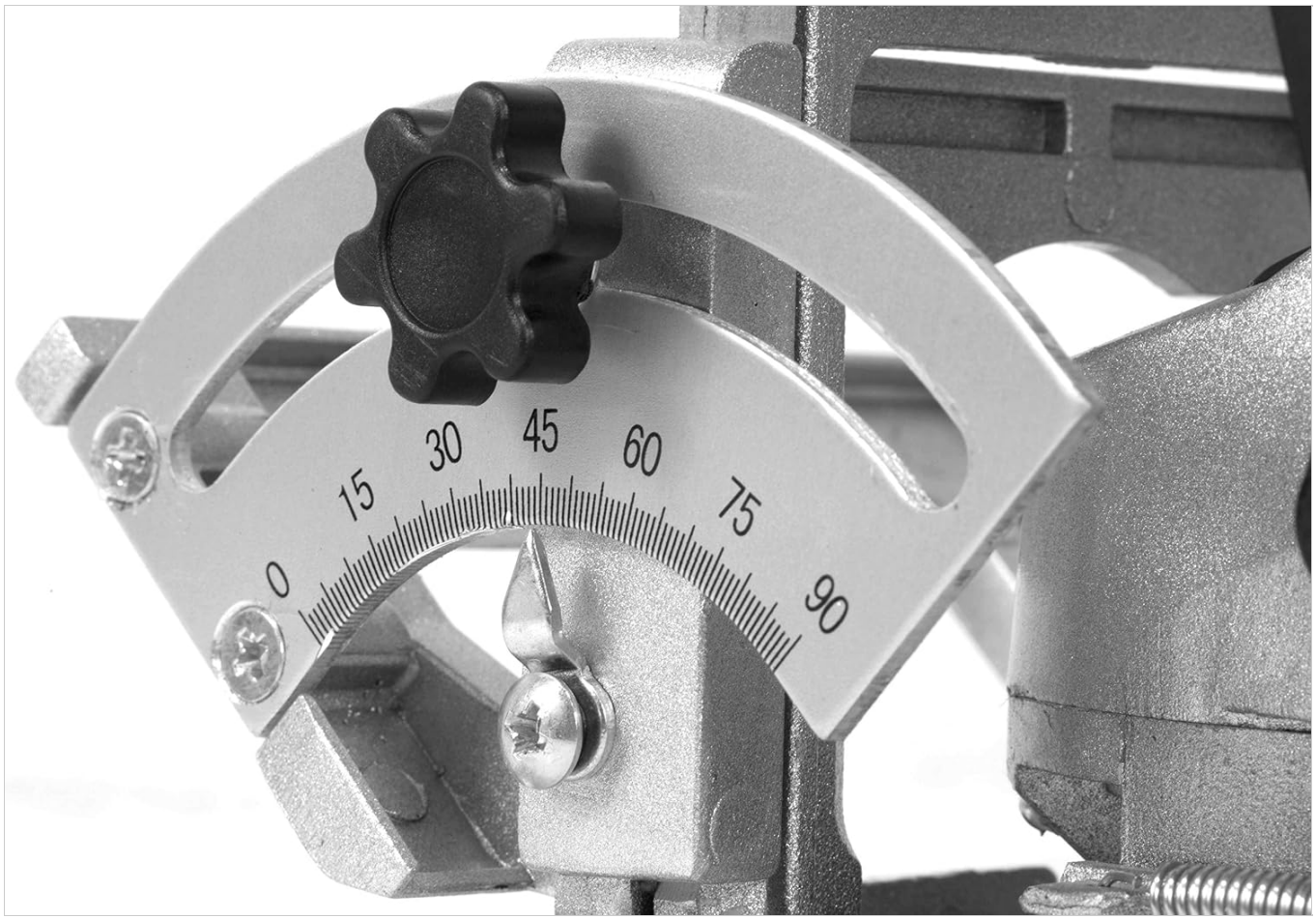

Image: A close-up of the depth adjustment feature on the WEN JN8504, displaying the numbered dial for biscuit sizes (#0, #10, #20) and a ruler for fine adjustments.

Operating Instructions

1. Preparing the Workpiece

Ensure your workpiece is securely clamped to a stable surface. Mark the locations for your biscuit slots accurately.

2. Making a Cut

1. With the tool unplugged, verify the blade is clean and sharp.
2. Plug in the joiner. Hold the tool firmly with both hands.
3. Align the fence with your marked line on the workpiece.
4. Turn on the tool and allow the blade to reach full speed.
5. Smoothly plunge the joiner into the workpiece until the desired depth is reached. Do not force the tool.
6. Withdraw the tool and turn it off. Wait for the blade to stop completely before setting the tool down.

The WEN JN8504 is suitable for various joint types, including edge miter joints, corner joints, T joints, offset joints, frame joints, and edge-to-edge joints. Adjust the fence and depth settings according to the specific joint requirements.

Maintenance

1. Cleaning

After each use, unplug the tool and clean off any sawdust or debris from the tool body, blade area, and dust port. Empty the dust bag regularly. Use a soft brush or compressed air for hard-to-reach areas. Do not use solvents or harsh chemicals.

2. Blade Care

Inspect the 4-inch carbide-tipped blade regularly for sharpness and damage. A dull or damaged blade can lead to poor cuts and increased motor strain. Replace the blade when necessary. To change the blade, unplug the tool, use the provided blade wrench to loosen the arbor nut, replace the blade, and securely tighten the nut.

3. Storage

Store the biscuit joiner in its blow mold carrying case in a clean, dry place, out of reach of children.

Troubleshooting

Problem	Possible Cause	Solution
Tool does not start	No power supply; faulty switch; tripped circuit breaker.	Check power cord and outlet. Ensure switch is in ON position. Reset circuit breaker.
Poor cut quality / rough edges	Dull or damaged blade; incorrect depth setting; workpiece not secured.	Replace blade. Verify depth setting. Secure workpiece firmly.
Excessive vibration or noise	Loose blade; damaged blade; internal component issue.	Tighten blade arbor nut. Replace damaged blade. If problem persists, contact WEN customer service.
Dust bag not collecting effectively	Dust bag full; dust port clogged; dust bag not properly attached.	Empty dust bag. Clear any blockages from the dust port. Reattach dust bag securely.

Specifications

Model: JN8504

Brand: WEN

Amperage: 8.5 A

Maximum Rotational Speed: 10,000 RPM

Blade Size: 4-inch Carbide-Tipped

Fence Adjustment: 0-90 degrees

Biscuit Sizes Supported: #0, #10, #20 (and custom)

Item Weight: 5.27 kg (11.62 lbs)

Included Components: Biscuit Joiner, Dust Bag, Biscuits (#0, #10, #20), Carrying Case

Warranty and Support

WEN products are designed for reliability and performance. While specific warranty details are not provided in this document, WEN typically offers a manufacturer's warranty on its power tools. Please refer to the warranty card included with your product or visit the official WEN website for the most up-to-date warranty information.
For technical assistance, replacement parts, or any questions regarding your WEN JN8504 Plate and Biscuit Joiner, please contact WEN customer service.

WEN Customer Service: Refer to your product packaging or the official WEN website for contact details.

Online Resources: Visit the WEN Store on Amazon for additional product information and support.

Ask a question about this manual

Ask about setup, troubleshooting, compatibility, parts, safety, or missing instructions. Manuals+ will review the question and use this page's manual context to help answer it.

Name

Anonymous

Email

you@example.com

After a successful submission, we securely hash the supplied account or form email before sending it to Microsoft Advertising for conversion attribution. Privacy details.

Question

Example: How do I reset this device or fix this error?

Details

Model number, symptoms, what you tried, or the section of the manual you are using.

Submit question

Open the live page

https://manuals.plus/asin/B08BZX83N2

More documents and user manuals: **https://manuals.plus/**