Saved from manuals.plus.
Open the live page for links to other documents and user manuals.

Tieasy A-USB Fan-0422-465

Tieasy 36 inch Island Range Hood Instruction Manual

Model: A-USB Fan-0422-465

1. Product Overview

The Tieasy 36 inch Island Range Hood is a high-performance kitchen appliance designed to efficiently remove smoke, grease, and odors from your cooking area. Featuring a sleek stainless steel and tempered glass design, it offers powerful ventilation with a quiet motor and user-friendly controls. This manual provides essential information for safe installation, operation, and maintenance of your range hood.



Figure 1: Front view of the Tieasy 36 inch Island Range Hood.

2. Safety Information

WARNING: To reduce the risk of fire, electric shock, or injury to persons, observe the following:

- Installation work and electrical wiring must be done by qualified person(s) in accordance with all applicable codes and standards, including fire-rated construction.
- Sufficient air is needed for proper combustion and exhausting of gases through the flue (chimney) of fuel burning equipment to prevent back-drafting.
- When cutting or drilling into wall or ceiling, do not damage electrical wiring and other hidden utilities.
- Ducted fans must always be vented to the outdoors.
- Always disconnect power from the unit before servicing.

3. What's in the Box

Your Tieasy Island Range Hood package includes the following components:

- Range Hood Unit (with pre-installed LED Lights and Mesh Filters)

- Adjustable Chimney Sections
- Mounting Hardware
- Ducting Kit (6-inch diameter)
- Prong Plug
- Air Backdraft Damper
- Instruction Manual



Figure 2: Key features of the range hood including LED lights, fan speeds, mesh filters, and adjustable chimney.

4. Setup and Installation

This range hood is designed for island mount installation. Professional installation is recommended for optimal performance and safety.

4.1 Pre-Installation Checklist

- Ensure you have all components listed in Section 3.
- Verify ceiling height is between 7.5' and 9.5' for proper chimney adjustment.

- Confirm electrical supply (120 Volts) is available at the installation site.
- Prepare a 6-inch diameter ducting route to the outdoors.

4.2 Installation Steps (Summary)

1. Securely mount the ceiling bracket to a sturdy ceiling structure.
2. Assemble the adjustable chimney sections to the desired height.
3. Connect the 6-inch diameter ducting to the range hood's top vent and route it to the exterior. Ensure the air backdraft damper is correctly installed.
4. Carefully lift and attach the range hood body to the ceiling bracket.
5. Connect the electrical prong plug to a suitable power outlet.
6. Install the decorative chimney covers.

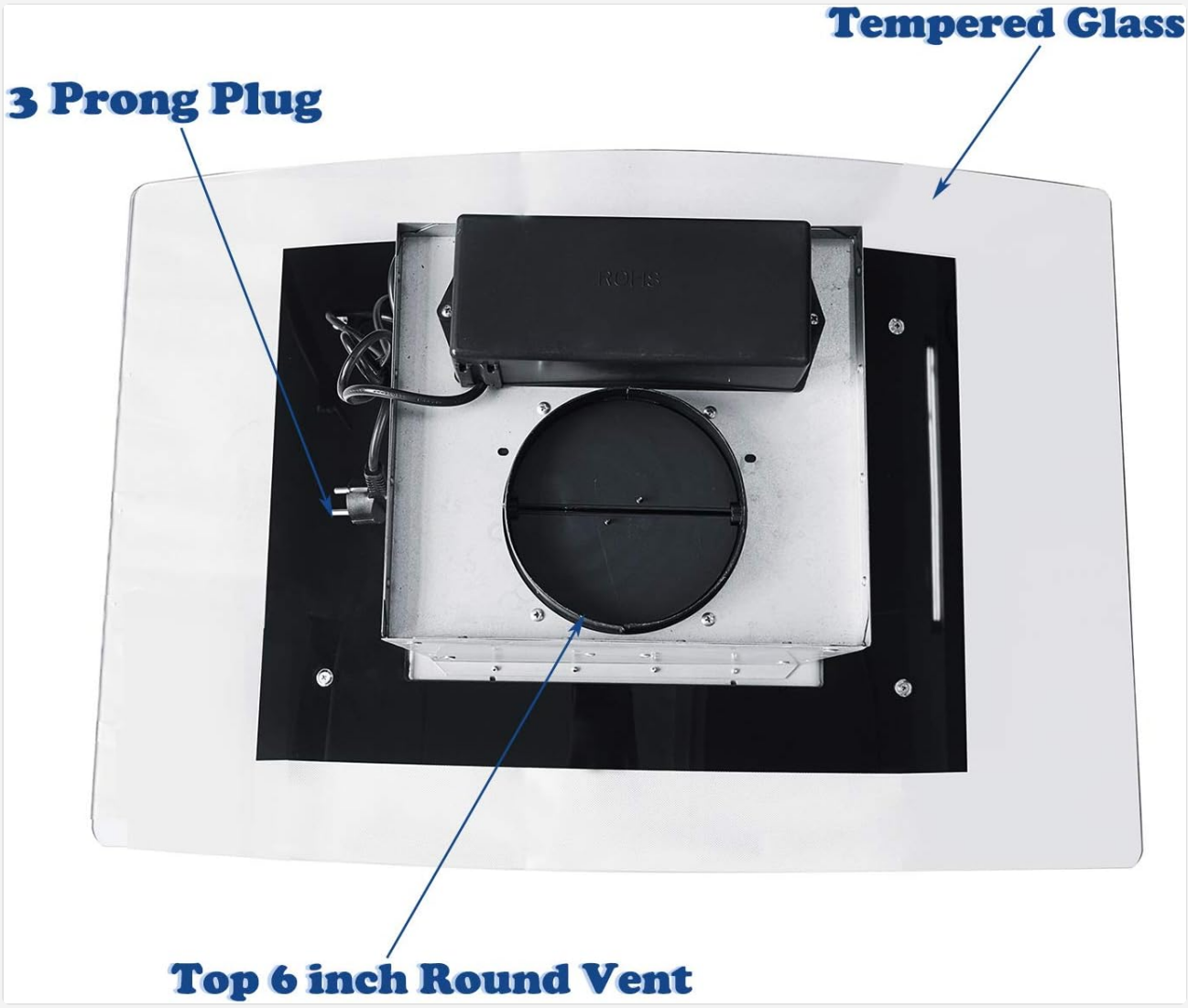

Figure 3: Top view illustrating the 3-prong plug and the 6-inch round vent connection point.

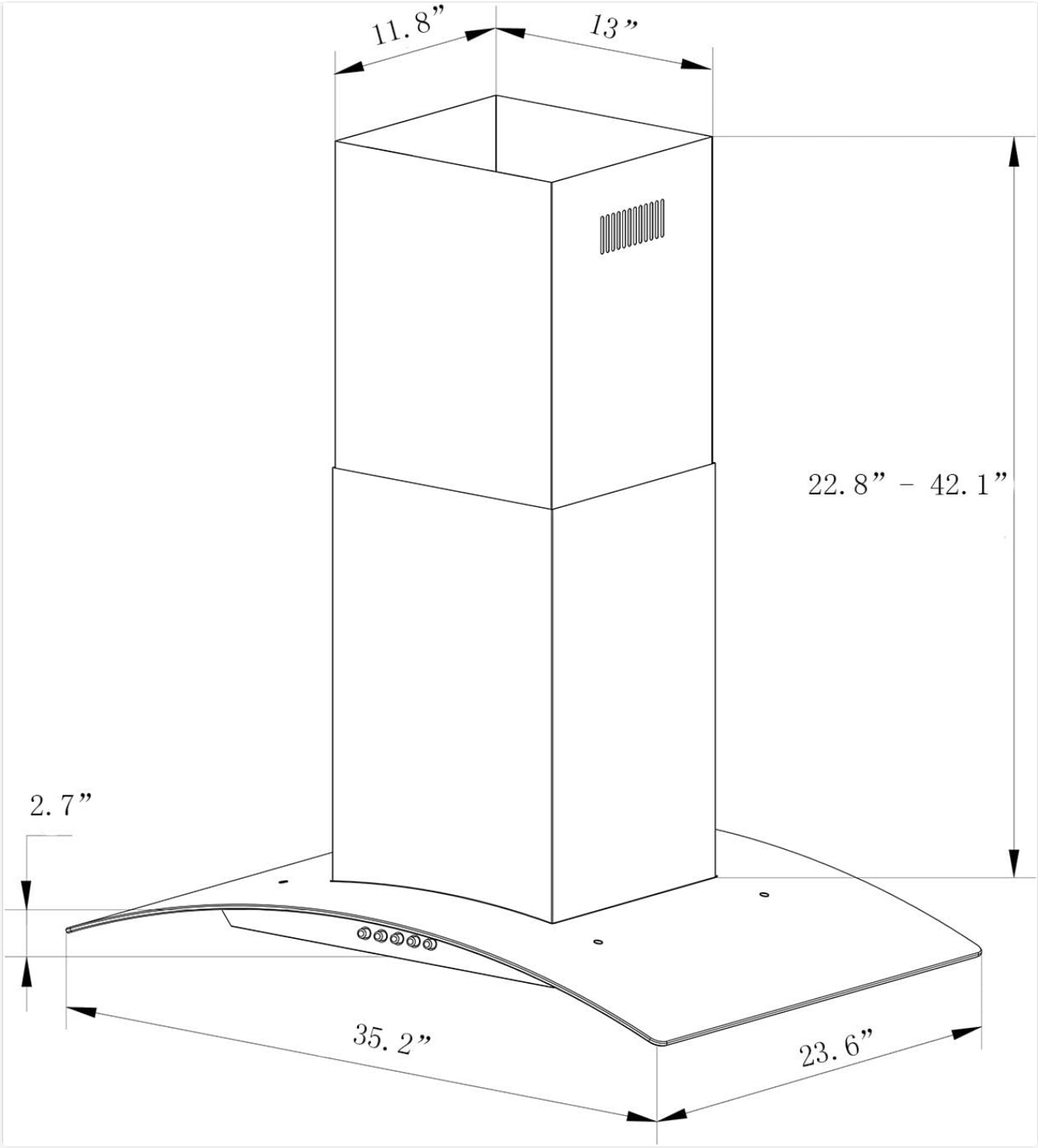

Figure 4: Detailed dimensions of the range hood for installation planning.

5. Operating Instructions

The Tieasy Island Range Hood features a push-button control panel for easy operation.

5.1 Fan Speed Control

The range hood offers 3 fan speeds to accommodate various cooking needs:

- **Low Speed:** Ideal for simmering and light cooking.
- **Medium Speed:** Suitable for everyday cooking.
- **High Speed:** Max. 700 CFM airflow for heavy cooking, frying, or strong odors.

Press the corresponding push button on the control panel to select your desired fan speed. Press the 'Off' button to turn off the fan.

5.2 LED Lights

The range hood is equipped with 4 bright LED lights to illuminate your cooking surface.

- Press the light button on the control panel to turn the lights ON or OFF.

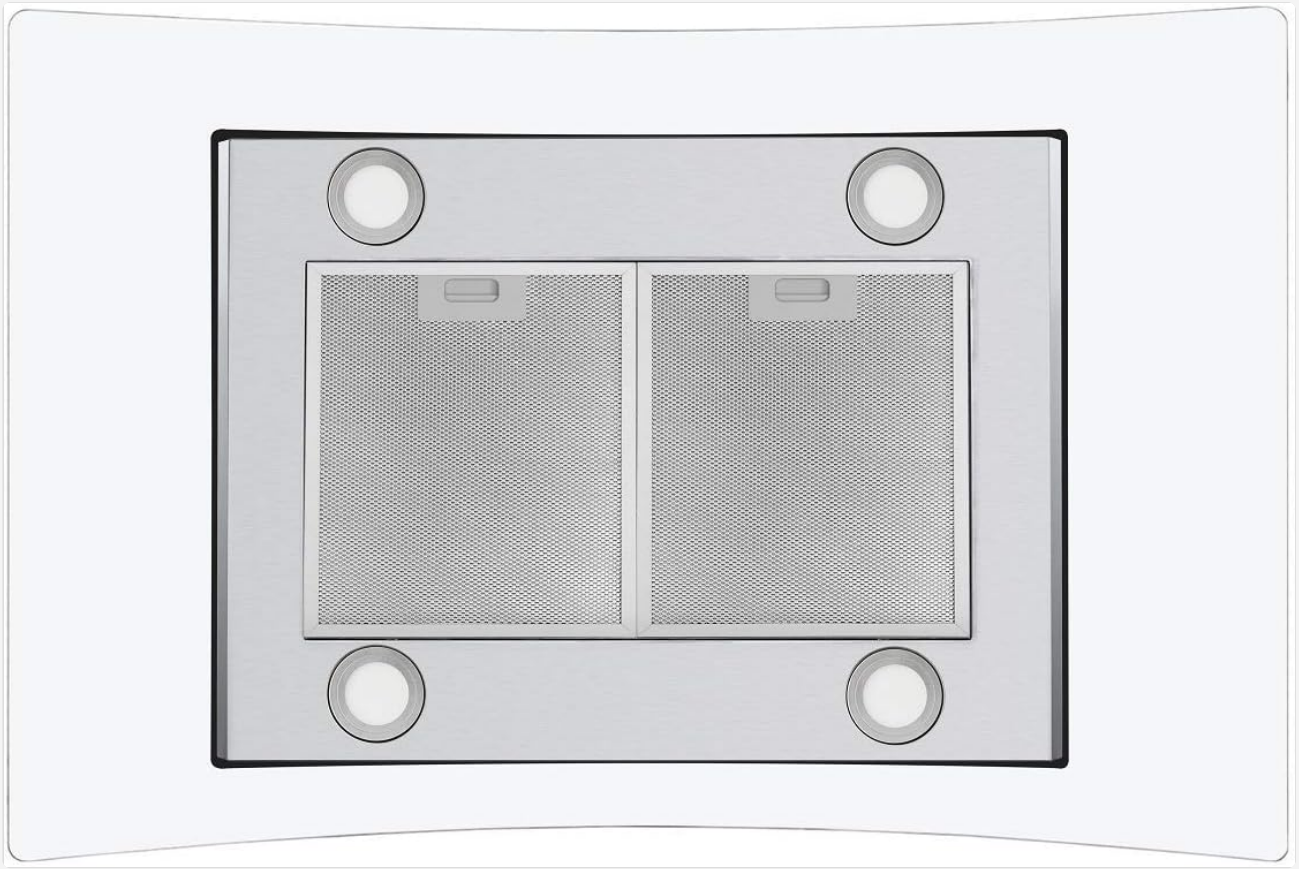

Figure 5: Underside view highlighting the mesh filters and LED lights.

6. Maintenance

Regular maintenance ensures optimal performance and longevity of your range hood.

6.1 Cleaning the Mesh Filters

The range hood comes with 2 removable 5-layer aluminum mesh filters designed to trap grease. These filters are easy to remove, washable, and easy to clean.

- To remove: Locate the release tabs on each filter and gently pull down to disengage.
- To clean: Wash filters by hand with warm, soapy water or place them in a dishwasher.
- To reinstall: Align the filters with their slots and push up until they click into place.



Figure 6: The 5-layer aluminum mesh filters are designed for easy removal and cleaning.

6.2 Cleaning the Stainless Steel and Tempered Glass Surfaces

The 430-grade brushed stainless steel and tempered glass surfaces should be cleaned regularly to maintain their appearance.

- Use a soft cloth and a non-abrasive stainless steel cleaner or glass cleaner.
- Wipe in the direction of the grain for stainless steel.
- Avoid using abrasive pads or harsh chemicals that could scratch or damage the surfaces.

7. Troubleshooting

If you encounter issues with your range hood, refer to the following common problems and solutions:

Problem	Possible Cause	Solution
Fan does not turn on	No power supply; Motor malfunction; Control panel issue	Check power connection and circuit breaker. If problem persists, contact customer support.

Problem	Possible Cause	Solution
Poor suction performance	Clogged grease filters; Obstruction in ducting; Incorrect fan speed setting	Clean or replace filters. Check ducting for blockages. Increase fan speed.
Excessive noise	Loose parts; Motor issue; Improper installation of ducting	Check for loose screws or components. Ensure ducting is properly secured and not kinked.
LED lights not working	Loose connection; Faulty LED bulb; Electrical issue	Check light button. Ensure power is connected. Contact customer support for bulb replacement or electrical issues.

If the problem persists after attempting these solutions, please contact Tieasy customer support for assistance.

8. Specifications

Attribute	Value
Brand Name	Tieasy
Model Info	A-USB Fan-0422-465
Item Weight	61.9 pounds
Product Dimensions	35.2 x 23.6 x 42.1 inches (adjustable height)
Efficiency	High Efficiency
Noise Level	65 dB (at high speed)
Installation Type	Island Mounted
Part Number	USGI0290A
Special Features	Stainless Steel, Adjustable, LED Lights, Removable Filters
Color	Stainless Steel
Control Console	Push-Button
Voltage	120 Volts
Material Type	Stainless Steel
Included Components	Backdraft, LED Lights, Mesh Filter
Airflow (Max)	700 CFM

9. Warranty and Support

Your Tieasy 36 inch Island Range Hood comes with a**3-year limited parts warranty**. For warranty claims,

technical support, or any inquiries, please contact Tieasy customer service through the Amazon order link or visit the official Tieasy store on Amazon.

Tieasy Store: https://www.amazon.com/stores/Tieasy/page/923847FD-D2CA-4564-BF7B-CF1A110137C6

© 2023 Tieasy. All rights reserved.

Ask a question about this manual

Ask about setup, troubleshooting, compatibility, parts, safety, or missing instructions. Manuals+ will review the question and use this page's manual context to help answer it.

Name

Anonymous

Email

you@example.com

After a successful submission, we securely hash the supplied account or form email before sending it to Microsoft Advertising for conversion attribution. Privacy details.

Question

Example: How do I reset this device or fix this error?

Details

Model number, symptoms, what you tried, or the section of the manual you are using.

Submit question

Open the live page

https://manuals.plus/asin/B089YQCXJG

More documents and user manuals: **https://manuals.plus/**