**Saved from manuals.plus.**
**Open the live page for links to other documents and user manuals.**



## KAFF HBR 603

# KAFF HBR 603 Built-in Hob/Hobtop Instruction Manual

Model: HBR 603

## 1. Introduction

This manual provides essential information for the safe and efficient installation, operation, and maintenance of your KAFF HBR 603 Built-in Hob/Hobtop. Please read these instructions carefully before using the appliance and retain them for future reference. Proper use and care will ensure optimal performance and longevity of your hob.




Image 1.1: Overview of the KAFF HBR 603 Built-in Hob/Hobtop.

## 2. Safety Information

Always prioritize safety when installing, operating, or maintaining your gas hob. Failure to follow these instructions could result in fire, electric shock, or personal injury.

- **Gas Safety:** Ensure proper ventilation in the kitchen. Do not store flammable materials near the hob. In case of a gas leak, turn off the gas supply immediately, open windows, and do not operate electrical switches or appliances.
- **Electrical Safety:** The appliance must be properly grounded. Do not use extension cords. Disconnect power before servicing.
- **Installation:** Installation must be performed by a qualified technician in accordance with local regulations and standards.
- **Children:** Keep children away from the appliance during operation and when it is cooling down.
- **Hot Surfaces:** Burners and surrounding areas become hot during use. Use oven mitts and avoid touching hot surfaces.
- **Ventilation:** Ensure adequate ventilation is maintained in the kitchen during hob operation.

## 3. Product Features

The KAFF HBR 603 Built-in Hob/Hobtop is designed for modern kitchens, offering a blend of style and functionality.

- **Burner Configuration:** Features 3 high-efficiency brass burners: one triple ring burner for high heat cooking and two dual ring burners for versatile cooking needs.




Image 3.1: Burner configuration showing one triple ring and two dual ring burners.

- **Auto Electric Ignition:** Provides convenient and quick ignition of burners with a simple turn of the knob.

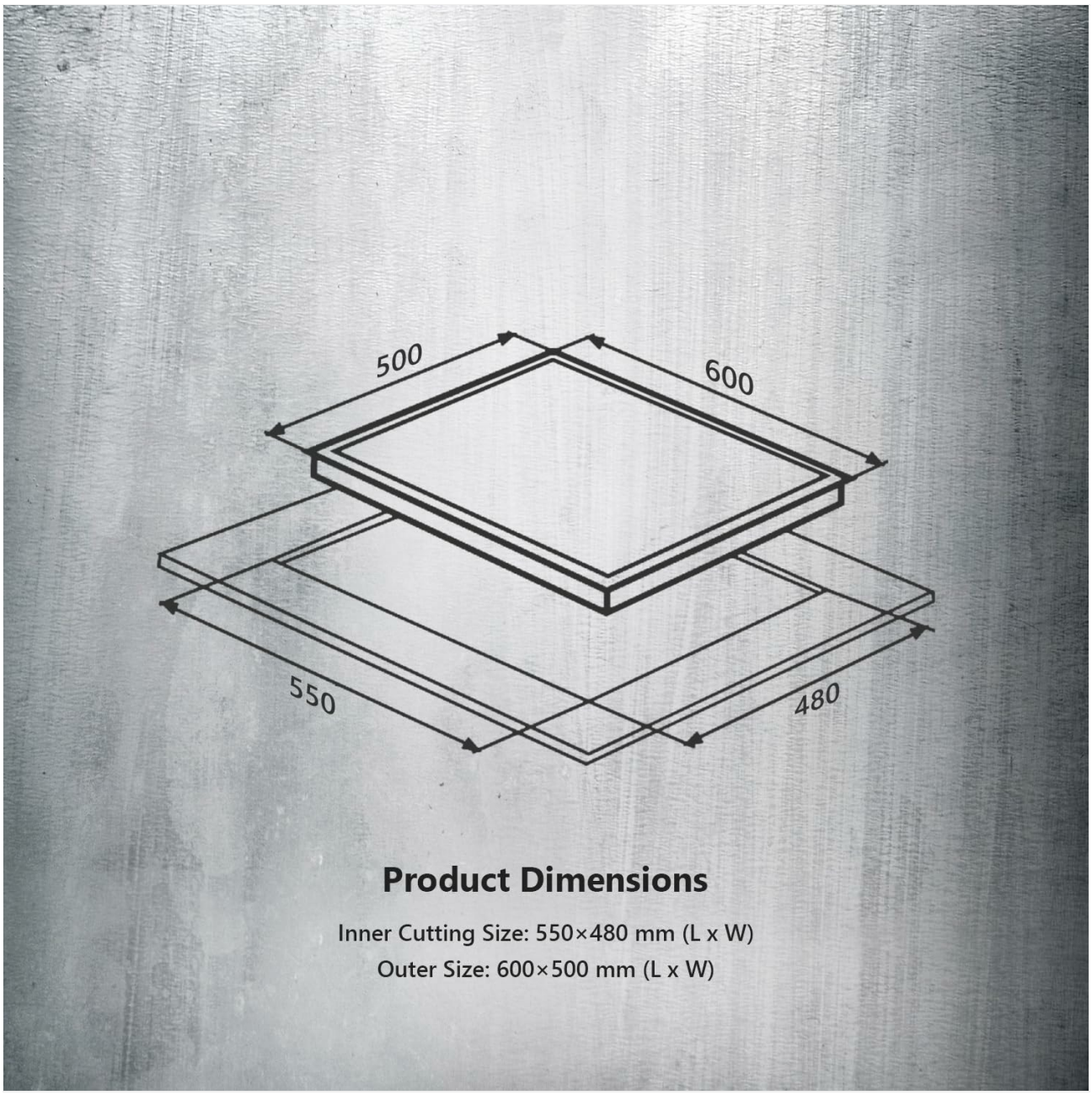


Image 3.2: Detail of the auto electric ignition system.

- **8mm Bevelled Black Tempered Glass:** A durable and elegant glass surface that is easy to clean and resistant to high temperatures.

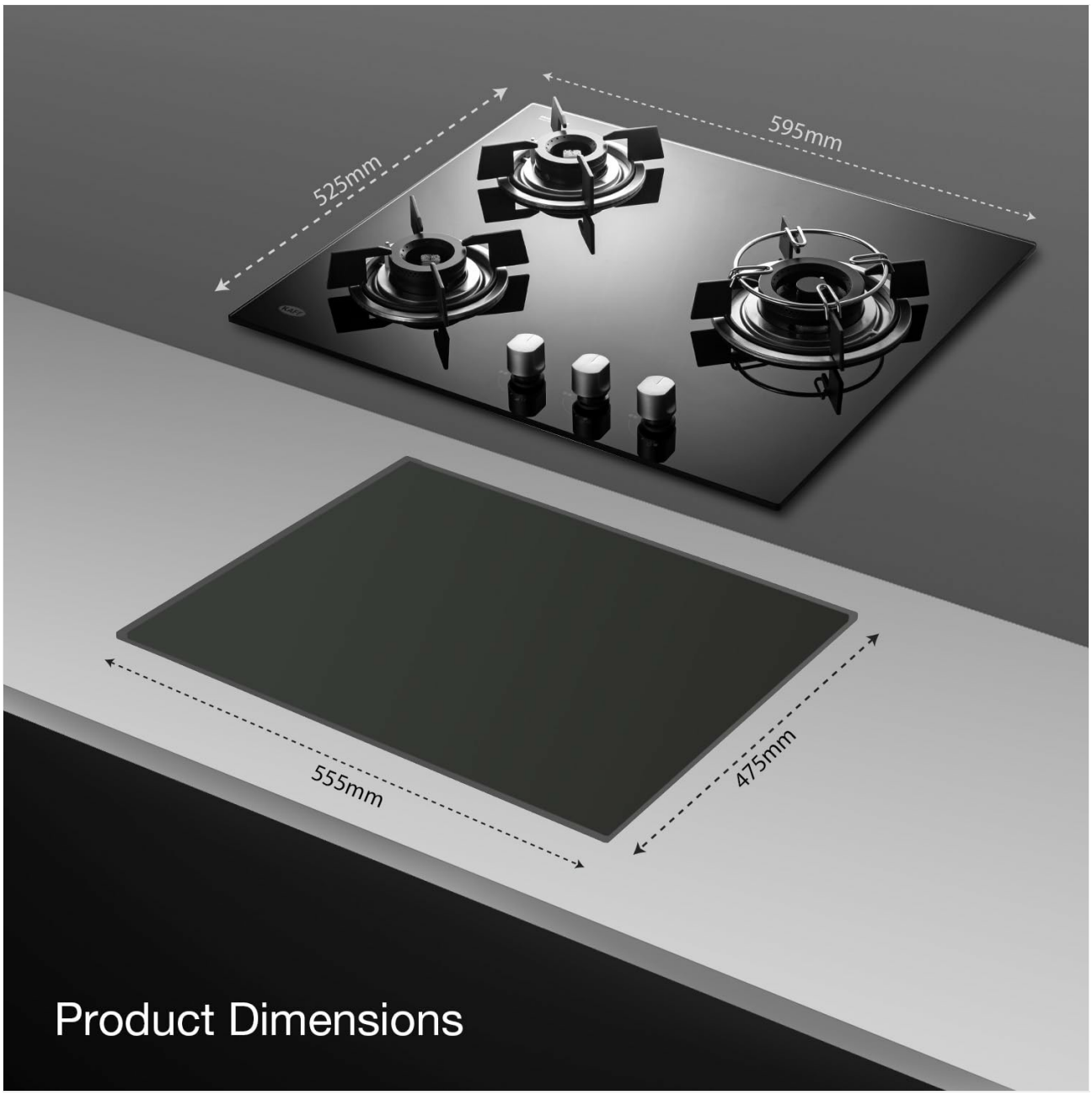


Image 3.3: View of the 8mm thick black tempered glass finish.

- **Easy Grip Metal Knobs:** Ergonomically designed metal knobs for precise control over flame intensity.




Image 3.4: Easy grip metal control knobs.

- **Stainless Steel Drip Tray:** Collects spills and makes cleaning easier, contributing to a hygienic cooking environment.




Image 3.5: Stainless steel drip tray for easy cleaning.

- **2-in-1 Design:** Can be used as a built-in hob integrated into the countertop or as a hobtop placed on the counter.

## 4. Installation and Setup

Installation of this appliance must be carried out by a qualified and authorized technician. Incorrect installation can lead to hazards and void the warranty.

### 4.1. Countertop Preparation

Ensure the countertop material is heat-resistant and stable. The cutting dimensions for built-in installation are critical for proper fit and safety.

- **Inner Cutting Size:** 550 mm (Length) x 480 mm (Width)
- **Outer Size of Hob:** 600 mm (Length) x 500 mm (Width)

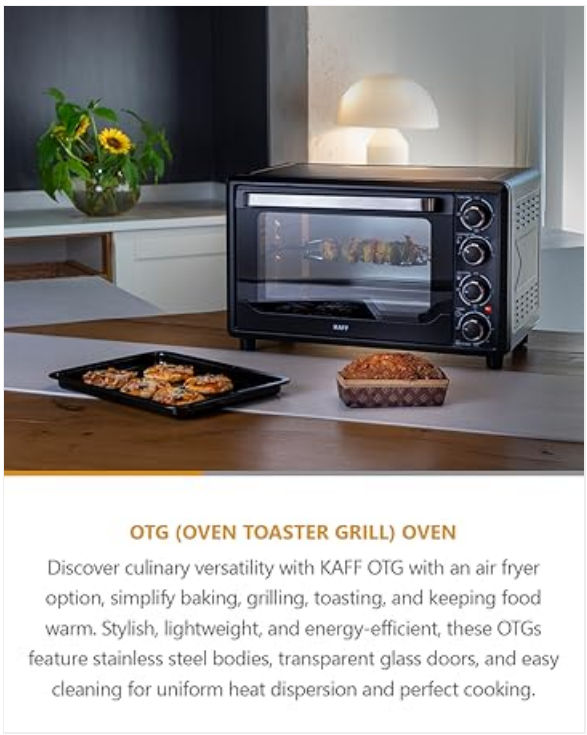


Image 4.1: Product dimensions and recommended cutting size for installation.

### 4.2. Gas Connection

Connect the hob to the gas supply using appropriate fittings and flexible hoses, ensuring all connections are leak-free. Use a soap solution to check for leaks.

### 4.3. Electrical Connection

Connect the hob to a grounded electrical outlet for the auto electric ignition system. Ensure the voltage and frequency match the appliance requirements.

## 5. Operating Instructions

Follow these steps for safe and effective operation of your hob.

### 5.1. Igniting a Burner

1. Place a cooking vessel on the pan support over the desired burner.
2. Push down and turn the corresponding control knob counter-clockwise to the 'High' flame position.
3. The auto electric ignition will spark, igniting the gas. Hold the knob down for a few seconds after ignition to allow the thermocouple to heat up and activate the flame failure device (if present).
4. Once the flame is stable, release the knob. Adjust the flame intensity by turning the knob between 'High' and 'Low' positions.

### 5.2. Turning Off a Burner

Turn the control knob clockwise until it clicks into the 'Off' position. Ensure the flame is completely extinguished.

## 6. Maintenance and Cleaning

Regular cleaning and maintenance will keep your hob in excellent condition and ensure safe operation.

### 6.1. Daily Cleaning

- Allow the hob to cool completely before cleaning.
- Wipe the glass surface with a soft cloth and a mild detergent or glass cleaner. Avoid abrasive cleaners or scouring pads.
- Remove and clean the pan supports and burner caps with warm soapy water. Dry them thoroughly before reassembling.

### 6.2. Burner Maintenance

- Periodically check burner ports for blockages. Use a fine wire or needle to clear any debris.
- Ensure burner caps are correctly seated after cleaning to prevent uneven flames.

### 6.3. Stainless Steel Drip Tray

The stainless steel drip tray can be easily removed for cleaning. Wash with warm soapy water and dry completely to prevent water spots or corrosion.

## 7. Troubleshooting

Before contacting customer service, refer to the following common issues and their solutions.

| Problem | Possible Cause | Solution |
|---|---|---|
| Burner does not ignite. | No gas supply, power outage, clogged burner port, wet ignition pin. | Check gas supply, check power, clean burner ports, dry ignition pin. |
| Flame is uneven or yellow. | Clogged burner ports, incorrect burner cap placement. | Clean burner ports, ensure burner cap is correctly seated. |
| Gas smell detected. | Gas leak. | Immediately turn off gas supply, ventilate area, do not use electrical switches, contact a qualified technician. |
| Ignition sparks continuously. | Moisture on ignition pin, faulty ignition switch. | Dry ignition pin, if issue persists, contact service. |

## 8. Specifications

| | |
|---|---|
| **Model Number** | HBR 603 |
| **Type** | Built-in Hob / Hobtop |
| **Size** | 60 CM |
| **Burners** | 3 (1 Triple Ring, 2 Dual Ring) |
| **Burner Material** | High Efficiency Brass |
| **Ignition Type** | Automatic Electric Ignition |
| **Glass Type** | 8 mm Bevelled Black Tempered Glass |
| **Pan Support** | Matt Enameled Pan Support |
| **Control Knobs** | Easy Grip Metal Knobs |
| **Drip Tray** | Stainless Steel |

| | |
|---|---|
| **Inner Cutting Size (L x W)** | 550 mm x 480 mm |
| **Outer Size (L x W)** | 600 mm x 500 mm |
| **Item Weight** | 15 kg |
| **Included Components** | 1x Built-in Hob, 1x Instruction Manual, 1x Warranty Card |
| **Country of Origin** | India |

## 9. Warranty Information

Your KAFF HBR 603 Built-in Hob/Hobtop comes with the following manufacturer's warranty:

- **2 Years Warranty:** Covers Glass, Ignition Wire, Switch, Bypass, and Generator.
- **5 Years Warranty:** Covers Burners.

Please retain your purchase receipt and warranty card for any warranty claims. The warranty terms and conditions are detailed in the included warranty card.

## 10. Customer Support

For technical assistance, service requests, or any queries regarding your KAFF HBR 603 hob, please contact KAFF Appliances customer support.

**Manufacturer:** KAFF Appliances (I) Pvt. Ltd.

**Customer Service Helpline:** 18001802221

When contacting support, please have your model number (HBR 603) and purchase details ready.


### Ask a question about this manual

Ask about setup, troubleshooting, compatibility, parts, safety, or missing instructions. Manuals+ will review the question and use this page's manual context to help answer it.

**Name**

Anonymous

**Email**

you@example.com

After a successful submission, we securely hash the supplied account or form email before sending it to Microsoft Advertising for conversion attribution. Privacy details.

**Question**

Example: How do I reset this device or fix this error?

**Details**

Model number, symptoms, what you tried, or the section of the manual you are using.

Submit question

---

**Open the live page**

**https://manuals.plus/asin/B087TW84N7**

More documents and user manuals: **https://manuals.plus/**