Saved from manuals.plus.
Open the live page for links to other documents and user manuals.

BANVIE ES002

BANVIE Car RFID Push to Start Ignition Kit User Manual

Model: ES002

1. Introduction

This manual provides comprehensive instructions for the installation, operation, and maintenance of the BANVIE Car RFID Push to Start Ignition Kit. This system is designed to simplify vehicle starting and enhance security with its keyless engine start/stop and transponder immobilizer functions. It is compatible with DC12V vehicles.
For optimal performance and safety, it is highly recommended that installation be performed by a professional car alarm installer.

2. Package Contents

Please verify that all components listed below are included in your package:

- 1 x Car Engine Push Starter Host
- 1 x Push Start Stop Button
- 1 x RFID Sensor Ring
- 2 x RFID Key (ID Cards)
- 1 x Installation Wire Harness
- 1 x User Manual (this document)



Image: Overview of all components included in the BANVIE Car RFID Push to Start Ignition Kit, including the main host, push button, RFID sensor ring, two RFID keys, and wiring harness.

3. Features

The BANVIE Car RFID Push to Start Ignition Kit offers the following features:

- **One-Button Operation:** Easily start or stop the engine with a single push of a button.
- **ACC and Dashboard Functionality:** Provides access to accessory (ACC) and ignition (ON) modes before engine start.
- **Automatic Host Lock:** The system host automatically locks 30 seconds after the engine is stalled, enhancing security.
- **System Compatibility:** Can be integrated with existing car alarm systems or keyless entry systems.
- **RFID Immobilizer:** Features an anti-theft function with a warded lock card. The system automatically re-enters arming mode after 15 seconds if the start button is not pressed after disarming.
- **RFID Engine Lock:** In arming mode, approaching the RFID key (ID card) within 2-5cm of the detection circle will

disarm the system, indicated by a "Bi Bi" sound. The start button will not function if the system is armed.

- **Service Mode:** An ID card can be used to enter a service mode, bypassing the immobilizer, allowing the engine to be started directly without the ID card.
- **Code Learning:** A master card allows for the deletion of all previously learned ID cards (e.g., if a card is lost) and the learning of new ID cards.



Image: Illustration of the RFID ID cards and the Master card, which is used for managing other ID cards.

4. Safety Information

- This product is designed for DC12V vehicles only. Do not attempt to install it in vehicles with different voltage systems.
- Professional installation by a certified car alarm installer is strongly recommended to ensure correct wiring and safe operation. Improper installation can lead to vehicle damage or malfunction.
- If your vehicle has a chip key (immobilizer system), an extra bypass module (e.g., ASIN B075TH5B91) may be required for proper functionality. Consult with a professional installer.
- Ensure the RFID sensor ring is installed in a hidden place known only to you, with a sensing distance of 3-5 cm for optimal security.

5. Setup and Installation

Installation of the BANVIE Car RFID Push to Start Ignition Kit involves electrical wiring and integration with your vehicle's existing systems. Due to the complexity and potential for vehicle damage, professional installation is highly recommended.

5.1 Wiring Connection Diagram

Refer to the detailed wiring diagram below for connecting the system components. Ensure all connections are secure and insulated to prevent short circuits.

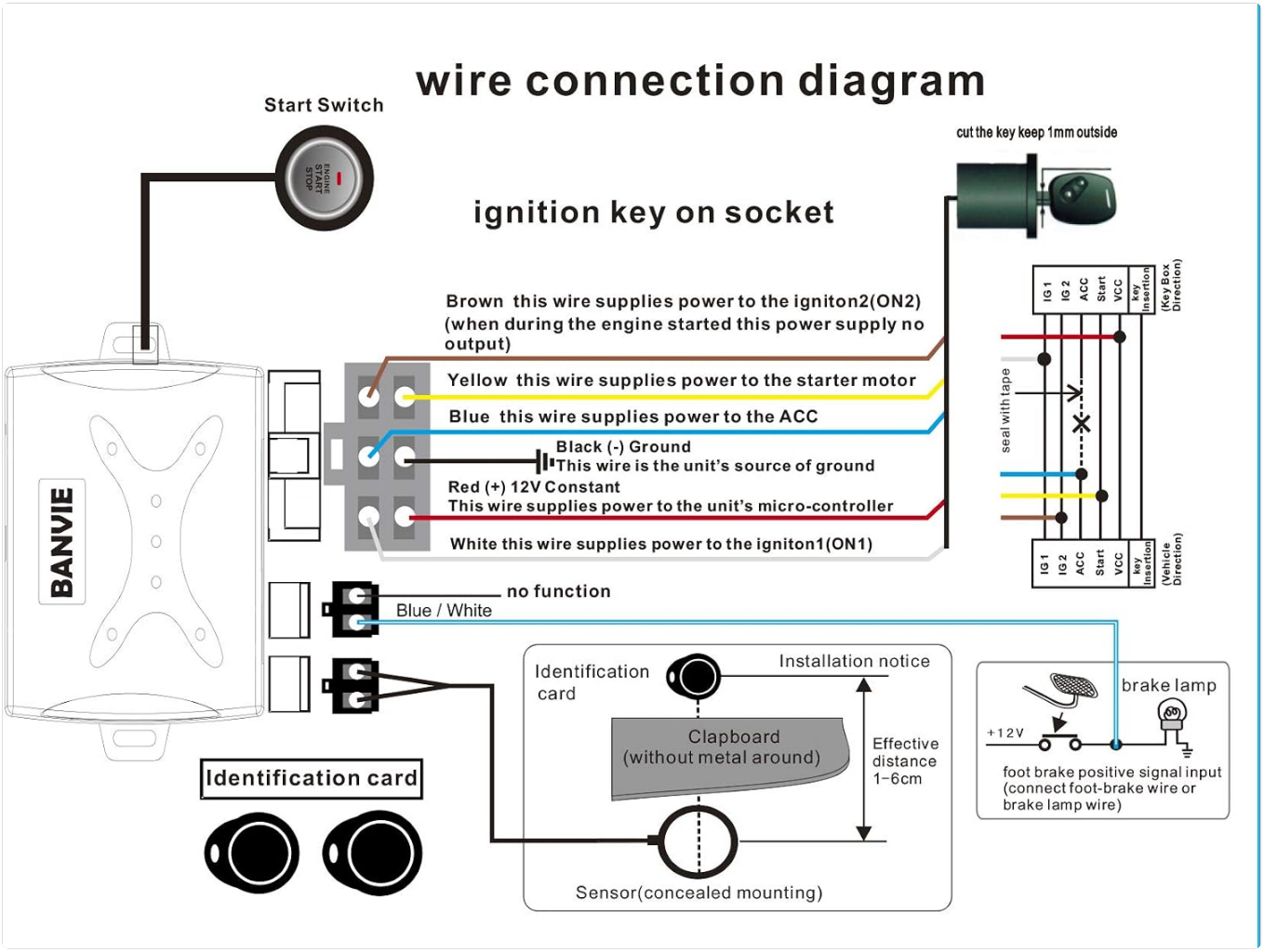

Image: A comprehensive wiring diagram illustrating how to connect the main host, push button, RFID sensor, and integrate with the vehicle's ignition system and brake lamp.

5.2 RFID Sensor Ring Placement

The RFID Sensor Ring should be installed in a concealed location within the vehicle, such as behind the dashboard or under a panel, where it is not easily visible but accessible for the RFID key to be sensed (effective distance 1-6 cm). This ensures the anti-theft function is effective.



Image: The RFID key and sensor ring, emphasizing that the system requires the key's authorization to start the engine and should be installed in a hidden location.

5.3 Replacing the Ignition Switch

The push-to-start button replaces the traditional key ignition switch. Ensure the original ignition switch is properly disconnected and the new button is securely mounted.



Image: The push start/stop button with examples of how it replaces the traditional key ignition, showing various dashboard installations.

6. Operating Instructions

Familiarize yourself with the following operating procedures for the BANVIE Push to Start system:

6.1 ACC, ON, OFF Recycle Mode

1. In disarmed mode, without stepping on the foot brake, press the START/STOP button once to enter ACC mode.
2. Press the button again to enter ON mode (dashboard lights up).
3. Press the button a third time to return to OFF mode.

6.2 Engine Start

In disarmed mode, step on the foot brake and hold it. Press the START/STOP button once. The engine will start, and the indication LED on the button will remain ON.

6.3 Engine Stop

Step on the foot brake and hold it. Press the START/STOP button once. The engine will cut off, and the indication LED will turn OFF.

6.4 Long Press Start (Cold Weather)

If the engine cannot be started in cold winter conditions, press and hold the START/STOP button for 3 seconds while holding the foot brake.

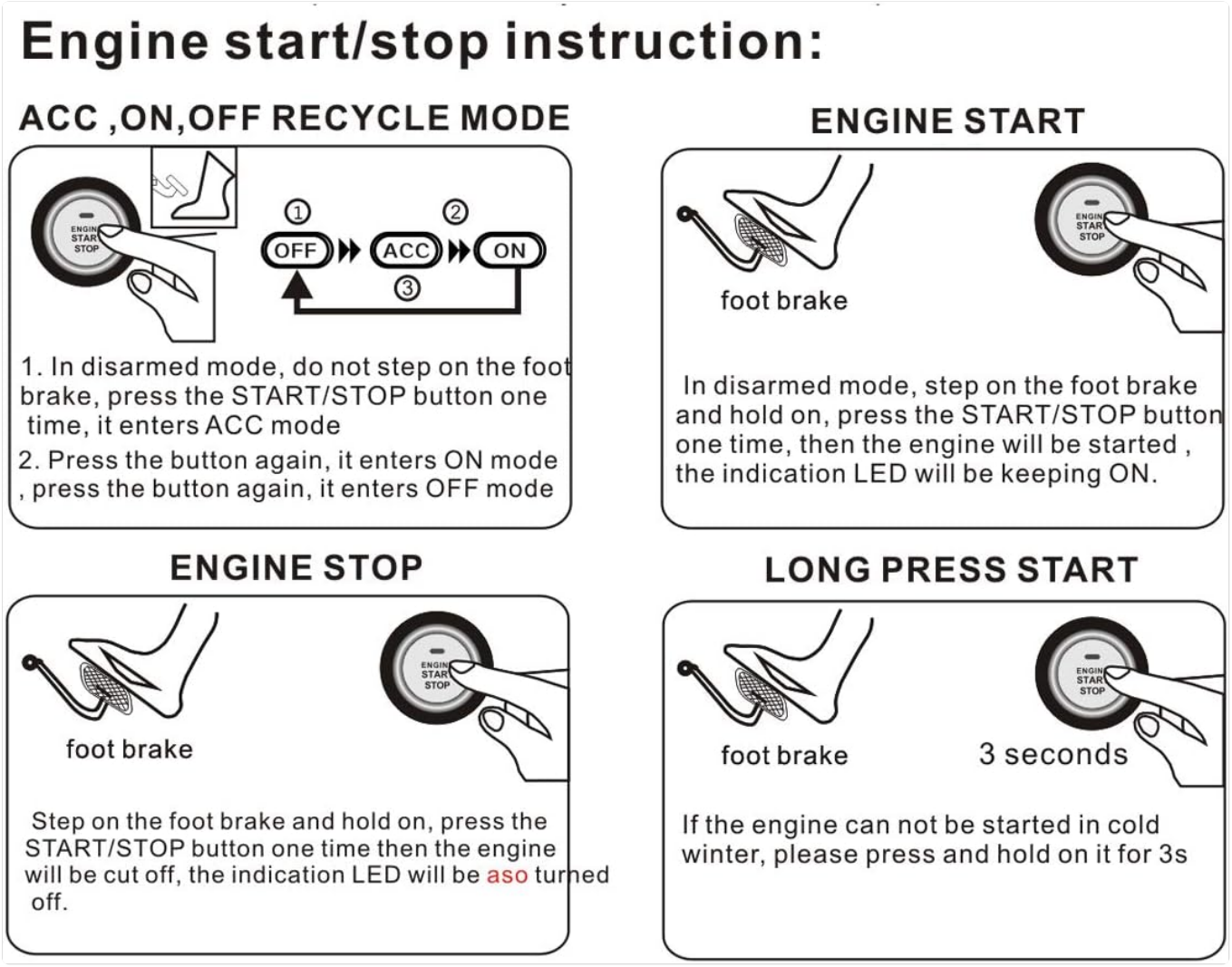

Image: Visual instructions detailing the steps for ACC/ON/OFF mode cycling, engine start, engine stop, and long press start for cold weather conditions.

6.5 RFID Engine Lock and Disarming

When the system is in arming mode, bring an authorized RFID key (ID card) within 2-5 cm of the RFID Sensor Ring. The system will emit a "Bi Bi" sound, indicating it is disarmed and ready for engine start. If the system is not disarmed, the start button will not function.

6.6 Service Mode

To enter service mode and bypass the immobilizer, use an authorized ID card. In this mode, the engine can be started directly without requiring the ID card for subsequent starts, useful for vehicle servicing.

6.7 Code Learning (Master Card Function)

The Master Card is used to manage the RFID keys (ID cards). If an ID card is lost or you wish to reset the system's learned cards:

1. Use the Master Card to delete all former ID cards. Once deleted, these cards will no longer function with the system.

2. After deleting, you can use the Master Card to learn new ID cards into the system.

7. Maintenance

The BANVIE Car RFID Push to Start Ignition Kit is designed for durability and minimal maintenance. Follow these general guidelines:

- Keep the main unit and components dry and free from excessive dust or debris.
- Avoid exposing the RFID keys to extreme temperatures or strong magnetic fields, which could affect their functionality.
- Periodically check all wiring connections for looseness or corrosion, especially after significant vehicle vibrations or impacts.
- If any component appears damaged, contact a qualified technician for inspection and replacement. Do not attempt to repair electrical components yourself unless professionally trained.

8. Troubleshooting

If you encounter issues with your BANVIE Push to Start system, consider the following common troubleshooting steps:

- **System Not Responding:**
  - Check all power connections to the main host unit. Ensure the vehicle's battery has sufficient charge.
  - Verify that the RFID key is within the sensing range (2-5 cm) of the RFID Sensor Ring when attempting to disarm.
- **Engine Not Starting:**
  - Confirm the system is disarmed (indicated by "Bi Bi" sound).
  - Ensure the foot brake is fully depressed when pressing the start button.
  - If in cold weather, try the "Long Press Start" method (hold button for 3 seconds).
  - Check if your vehicle's original immobilizer system requires a bypass module and if it is correctly installed.
- **Unexpected Behavior:**
  - Review the wiring diagram to ensure all connections are correct and secure.
  - If issues persist, it is advisable to consult a professional car alarm installer for diagnosis.

9. Specifications

Attribute	Value
Model Number	ES002

Attribute	Value
Material	ABS
Color	Black
Dimensions (Host)	10.5 x 8.5 x 3.2 cm (4.13 x 3.35 x 1.26 inches)
Product Dimensions (Overall)	6.5 x 4.57 x 1.57 inches
Operating Voltage	DC12V
Item Weight	13.1 ounces
RFID Sensing Distance	2-5 cm (0.79-1.97 inches)
Noise Level	10 dB

10. Warranty and Support

For warranty information and technical support, please refer to the contact details provided on the product packaging or the official BANVIE website. Keep your purchase receipt as proof of purchase for any warranty claims.
If you require assistance with installation or troubleshooting beyond the scope of this manual, it is recommended to contact a professional car alarm installer or the BANVIE customer support team.

© 2024 BANVIE. All rights reserved.

Ask a question about this manual

Ask about setup, troubleshooting, compatibility, parts, safety, or missing instructions. Manuals+ will review the question and use this page's manual context to help answer it.

Name

Anonymous

Email

you@example.com

After a successful submission, we securely hash the supplied account or form email before sending it to Microsoft Advertising for conversion attribution. Privacy details.

Question

Example: How do I reset this device or fix this error?

Details

Model number, symptoms, what you tried, or the section of the manual you are using.

Submit question

Answered questions about this manual

Why will the BANVIE ES002 Smart Start system start my 1968 Corvette but not shut it off?

Based on the BANVIE ES002 manual, the engine stop procedure requires a specific sequence. To shut off the engine, you must step on the foot brake and hold it, then press the START/STOP button...

Read full answer

Open the live page

https://manuals.plus/asin/B083V4KPLD

More documents and user manuals: **https://manuals.plus/**