OMNIMASTER

PATROLMASTER SERIES

PMD5
Body-Worn Camera
User Manual

English Edition

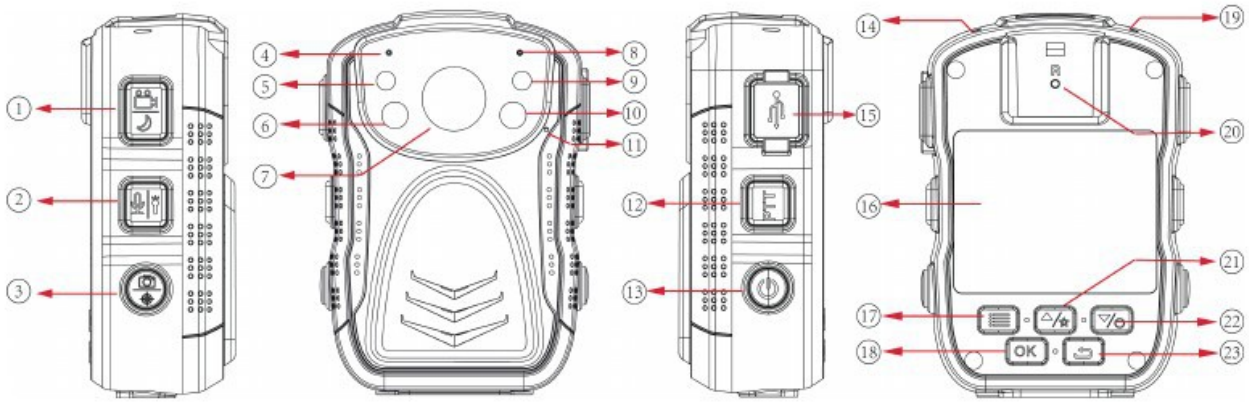

PMD5 controls and indicators. See the numbered key on page 4.

Simple on-device recording. Infrared night vision. USB-C file transfer.

BEFORE FIRST USE Read the safety section, charge the camera, set the correct date and time, and make a short test recording. Confirm that the recording can be played before relying on the device for important work.

Presented and supported by OmniMaster

Support: support@omnimaster.us | omnimaster.us

1 Quick start

This guide covers both PMD5 capacity versions. Recordings are stored locally on the device; storage capacity is not the same as battery operating time.

1. Use the included USB-C cable to charge the camera with a suitable DC 5V / 2A power source. A wall power adapter is not included.

2. Press and hold Power for about 3 seconds to turn the camera on. Set the correct date/time and preferred recording resolution.

3. Press the red Video button briefly to start recording. Press it briefly again to stop; the camera saves the file.

4. Press PTT to switch video resolutions quickly. In manual infrared mode, press and hold the red Video button while the camera is on to switch infrared night vision on or off.

5. Press Down / Playback to review saved videos, photos or audio recordings.

6. Connect the camera to a Windows PC or Mac through USB-C; copy files to your computer and check that the copies play correctly.

IMPORTANT To start video recording directly while the camera is powered off, press and hold the red Video / Night Vision button for 3 seconds. This differs from holding the red button while the camera is already on, which switches infrared night vision.

What is included

PMD5 body camera • USB-C cable for both charging and data transfer • short mounting clip • long mounting clip • user manual.

How to navigate this manual

Topic	Section
Safety, battery and preparation	2
Camera parts and display	3–4
Charging and power	4–5
Settings menu and defaults	6–8
Recording, photos, audio and infrared	9–10
Playback, file handling and reset	11–12
Technical information and troubleshooting	13–14
US Limited Warranty and support	15

2 Important safety and preparation

Heat, water and storage

- Do not leave the camera in a hot vehicle, direct sunlight or other high-temperature location. Keep it cool and dry when not in use.
- Avoid prolonged direct sun on the display and camera lens. Do not immerse the camera in water or expose it to moisture beyond its actual tested rating.
- Keep away from strong magnetic fields and sources of strong radio-frequency interference that may affect operation or recordings.

Built-in lithium battery

- Use suitable, correctly rated charging equipment. Power input is DC 5V / 2A; do not apply an unsuitable voltage.
- Do not crush, cut, puncture, heat, burn or improperly replace the battery. Incorrect replacement may cause fire or explosion.
- Do not expose the battery to excessive heat, direct flames or extremely low air pressure. Keep metallic objects away from exposed battery contacts.
- The battery is built in. Do not attempt to open or replace it yourself; request service assistance.
- Keep the camera and cable away from children during charging; the cable can create a strangulation or electric-shock hazard.

Before recording

- Make a short practice recording before using the camera for work. Review the file and confirm its audio and video are usable.
- Set the correct date and time. Check battery power, available storage and selected recording mode.
- When stored for a long period, recharge the camera approximately every two months; fully charge it before reuse.
- Use video and audio recording only where permitted by applicable law and workplace or site policy. Consent and notice requirements vary by location.

Recording reliability and data care

As with any electronic recorder, loss of power, damaged components, storage faults or a detached mounting clip can interrupt recording. Do not use the camera as the only method of preserving critical records. Regularly transfer and back up important footage. Video is not guaranteed to be accepted as legal evidence in every situation; requirements depend on how it is recorded, preserved and used.

LASER SAFETY The camera includes a red laser aiming light. Do not look into the beam or aim it toward anyone’s eyes, traffic or aircraft. Keep the device away from children. Laser-class information should be checked against the actual device label.

3 Camera parts and controls

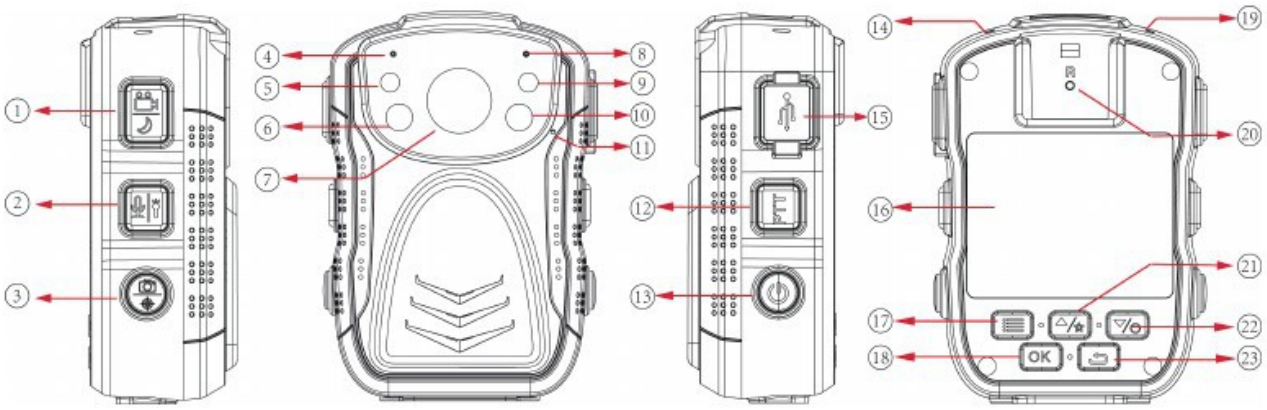

Figure 1 — Numbered PMD5 hardware drawing. The English labels below describe the current PMD5 controls.

No.	Part or control	No.	Part or control
1	Video recording / infrared night vision	13	Power on / off
2	Audio recording / white light	14	Power indicator
3	Photo / laser aiming light	15	USB Type-C port
4	Microphone	16	LCD display
5	Ambient light sensor	17	Menu button
6	Infrared light	18	OK / confirm
7	Camera lens	19	Operating-status indicator
8	Laser aiming light	20	Reset
9	White light / flashlight	21	Up / navigation
10	Infrared light	22	Down / playback
11	Microphone	23	Back / return
12	PTT / video resolution shortcut		

PTT BUTTON For the current PMD5 model, the PTT button is used to switch video resolution.

4 Display indicators and charging

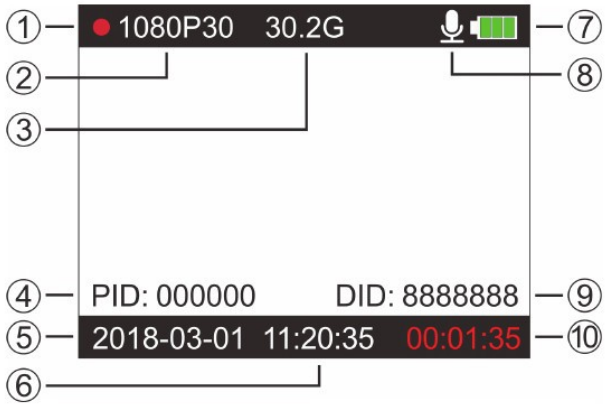

Figure 2 — Sample LCD preview showing the labeled icons (illustrative screen values only).

Icon	Meaning
1	Recording indicator: flashes red while video is recording
2	Current video resolution
3	Available local storage
4	Officer / user ID field
5	System date
6	System time
7	Battery-level icon
8	Audio-recording icon
9	Device ID
10	Elapsed recording time

Low battery warning

When battery voltage is low, the battery icon turns red. The device may show “Battery low. Please charge promptly” and sound an alert. The manufacturer manual states that it turns off approximately 5 minutes after the low-battery warning; charge promptly to avoid interrupted recording.

Charging

Connect the USB-C port to a compatible DC 5V / 2A power source using the supplied cable. Alternatively, connect the device to a computer USB port to charge. Charging speed may differ by source. The power indicator is blue while charging and goes out when charging is complete, according to the source manual.

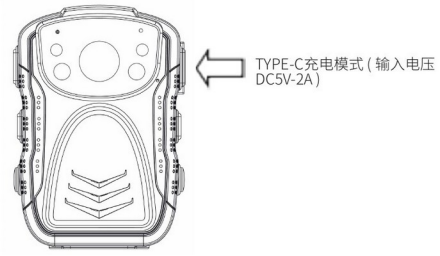

Figure 3 — USB-C input location (source diagram).

5 Power, standby and shortcuts

Turn the camera on or off

- To power on: press and hold Power for approximately 3 seconds. The preview screen appears and the power indicator is steady green.
- To power off: press and hold Power for approximately 3 seconds. The power and status indicators turn off.

Start recording from power-off

With the camera powered off, press and hold the red Video / Night Vision button for 3 seconds to turn on the camera and immediately begin video recording.

Actions while the camera is powered on

Button action	Result
Press red Video button	Start or stop video recording
Press and hold red Video button	Switch infrared night vision on/off in Manual IR mode
Press PTT	Cycle through video recording resolutions
Press Down / Playback	Open recording playback
Press Audio	Start or stop audio-only recording
Press Photo	Take a photograph
Press and hold Audio	Switch the white flashlight on/off
Press and hold Photo	Switch the laser aiming light on/off
Press Menu	Open the settings menu while in standby

Screen timeout is not power-off

With Auto Screen Off set to 60 seconds (the source default), the LCD turns off after the configured period of inactivity, including during recording. The camera remains powered on. Press a button to wake the screen. Auto Power Off is a separate menu option; test operational behavior before leaving the device unattended.

6 Settings menu navigation

From the powered-on standby/preview screen, press Menu. Use Up or Down to select a setting, press OK to enter edit mode, change the value with Up/Down, and press OK again to save your selection. Saved menu settings are used when the device is powered on again, subject to later changes or a factory reset.



Figure 4 — Original menu illustration; five rows from top: Video Resolution, Photo Resolution, Photo Burst, Video Pre-recording, Video Post-recording. Source screenshot is Chinese; actual English firmware labels may vary.

Menu groups

The following tables cover every setting documented in the original source. Some functions may require additional device-specific configuration or may not be relevant to all users.

7 Video and image settings

Setting	Choices / behavior	Source default
Video Resolution	2304×1296/30 fps; 1920×1080/30 fps; 1280×720/60 fps; 1280×720/30 fps; 848×480/30 fps.	1080p/30
Photo Resolution	8M; 12M; 14M; 34M.	14M
Photo Burst	Off; 3; 5; 10; 20 photos.	Off
Video Pre-recording	On/Off. When enabled, retains approximately 15 seconds of footage before starting a new recording.	Off
Video Post-recording	Off; 5 sec; 30 sec; 1 min; 5 min after the stop action.	Off
Super Storage	On/Off. Uses reduced image quality to reduce storage use and extend video capacity.	Off
Loop Recording	On/Off. When enabled and space is insufficient, older recordings may be overwritten.	Off
Segment Duration	5, 10, 15, 20 or 30 minutes per saved video segment.	5 min
Motion Detection	On/Off. Starts recording when movement is detected; continues until approximately 10 seconds without further motion.	Off

8 Power, notifications and system settings

Power and display

Setting	Options / function	Source default
Auto Screen Off	Off, 30 sec, 60 sec. Turns off the LCD, not necessarily the camera.	60 sec
LCD Brightness	Low, Medium, High.	High
Auto Power Off	Off, 1 min, 3 min, 5 min.	5 min

Sound Prompts	On/Off.	On
Vibration Prompts	On/Off.	On
Video Audio	On/Off. Controls audio in video recordings.	On
Volume	Low, Medium, High.	Low
Vehicle Mode	On/Off. When enabled, starts video recording when external power is applied.	Off
Stealth Recording	On/Off. Disables audible recording prompts and status lights; screen enters saver mode.	Off
Voice Announcements	On/Off.	Off
Hourly Announcement	On/Off.	Off

Security and device configuration

Setting	Menu behavior / values
Virus Firewall	On/Off (default Off). A label in the supplier menu; this is not a verified computer antivirus guarantee. Keep normal computer security protection enabled.
File Viewing Mode	File Mode or Photo Mode (default Photo Mode).
Device Number	Enter configuration code, then set the identifier. Source code is seven 8s (8888888).
Password Protection	On/Off. Source default access code is six 0s (000000). Change default codes for security.
Change Password	Enter current code and choose a new password; source default is six 0s (000000).

8 System settings (continued)

Setting	Menu behavior / values
Infrared Control	Manual or Auto (default Manual). Manual mode uses the red Video / Night Vision shortcut while powered on. Auto switches based on available light.
Restore Factory Settings	Select this option and confirm to return settings to factory defaults. Back up important recordings beforehand.
Date / Time	Use OK to enter edit mode; use navigation keys to set the time/date; OK to save.
VER	Displays the device software/firmware version.

Recording-quality and security notes

- A larger resolution setting may produce larger files. Actual storage duration depends on video mode and compression settings.
- Photo resolution settings specify output sizes; they do not establish the camera sensor's native resolution.
- Loop Recording can overwrite older recordings when storage fills. It is Off according to the supplied default settings. Check the setting before an important shift.
- Keep track of the selected date/time and ID fields if you use multiple cameras across a team.
- The manual does not specify encryption, audit logging or cloud evidence-management functions. Do not assume those capabilities.

9 Video, photos and audio

Record video

1. From preview, briefly press Video / Night Vision to begin recording. A flashing red dot and red operating-status light indicate recording.

2. Briefly press the same button again to stop recording. The camera saves the file and returns to preview.

3. Video files are saved in MOV format, using the date and time as part of the file name. They use H.264 video compression according to the supplier specifications.

With the camera powered off, hold Video / Night Vision for 3 seconds to power on and start recording directly. This is not the same as holding it while powered on to switch infrared night vision.

Capture a still image

From preview, press Photo to take one photo. A shutter sound may be heard. Images are saved as JPG files with date/time names. During video recording, a brief press of Photo can take a still image without stopping video.

Record audio only

From preview, press Audio to start an audio-only recording; the display shows the audio symbol and the status light flashes yellow. Press Audio again to stop and save. According to the neutral manual, holding Audio for 3 seconds while powered off can also directly start audio-only recording.

10 Infrared night vision and auxiliary lights

Infrared night vision

Night vision can be set to Manual or Auto under Menu > Infrared Control. The source default is Manual.

1. In Manual mode, with the camera powered on, press and hold the red Video / Night Vision button to enable infrared night vision.
2. The infrared LEDs turn on and the preview/recording changes to a black-and-white night-vision image.
3. Press and hold the red Video / Night Vision button again to disable infrared and return to normal color imaging.

In Auto mode, the camera changes between normal and infrared modes according to ambient brightness, as described in the supplier manual.

White flashlight

With the camera powered on, press and hold Audio / White Light to turn the white flashlight on or off.

Red laser aiming light

With the camera powered on, press and hold Photo / Laser to turn the red laser aiming light on or off. It indicates the direction the device is pointed; never point the beam toward eyes.

PTT / video resolution shortcut

With the camera powered on, press PTT to cycle through available video resolution modes. To select a saved startup resolution, use the Video Resolution item in the Settings menu and press OK to confirm. The PTT button on this PMD5 is not a two-way communication button.

11 Playback, deleting and transferring files

Review recordings on the camera

1. With the camera powered on, press Down / Playback to open the playback categories.
2. Use Up/Down to select Video, Photos or Audio; press OK to enter that category.
3. Use Up/Down to highlight a file and press OK to play or open it. Press Back to return to the previous screen.



Figure 5 — Playback category examples (Video / Photos / Audio). Source interface illustrations may use Chinese labels.

Transfer recordings to a Windows PC or Mac

1. Finish the recording and connect the supplied USB-C data cable from the camera to a Windows PC or Mac.
2. When the camera appears as a removable or separate storage drive, open Windows File Explorer or macOS Finder.
3. Browse the Video, Photos and Audio folders or their firmware-equivalent directories; select the files you want to keep.
4. Copy the selected files to a secure destination on the computer. Open at least one copied recording and confirm successful playback.
5. Safely disconnect the device once file operations are complete.

Windows and Mac USB recognition, file copying and playback have been tested and confirmed by the product owner for the current PMD5 models. Menu utilities, operating-system versions and USB data cables may differ. If your computer does not recognize the camera, contact OmniMaster support.

Manual deletion and loop overwrite are different

The camera does not provide normal on-device manual file deletion. To manually delete saved files, connect the camera to a computer and manage them from its mounted storage. When Loop Recording is enabled and memory becomes full, older recordings may be automatically overwritten to make room for new files. Back up important footage before it can be deleted or overwritten.

12 Reset, indicator lights and troubleshooting

Reset and restore factory settings

If the camera freezes or does not respond, gently press the recessed Reset control with the tip of a pen or a similar non-sharp object. Do not apply excessive force. The device turns off; power it on again. On the current PMD5, Reset restores factory settings rather than merely resuming previous settings. Reset effects on stored recordings have not been specified; back up important files before using Reset whenever possible.

Status lights

Device state	Indicator
Power on / preview	Power indicator: steady green
Video recording	Operating indicator: slowly flashes red
Audio recording	Operating indicator: slowly flashes yellow
Computer data connection	Operating indicator: red
Charging	Power indicator: blue; turns off when charge is complete
Take a photo	Operating indicator briefly flashes red

If the camera will not turn on

1. Charge the camera using a suitable power source; the supplier troubleshooting section recommends checking again after approximately 4 hours.

2. Check the cable and charging source for damage or malfunction.

3. If unresponsive, consider Reset, noting that factory settings will be restored; do not assume recordings are preserved.

4. If the problem persists, contact OmniMaster support instead of opening the device yourself.

If the image appears unusually red

Power off and restart the camera. If the issue remains, contact support with the recording mode and device firmware version.

If files are missing or cannot be played

Confirm the storage drive is recognized, recording has stopped and the file was saved. Check Video/Photo/Audio folders, storage remaining, date/time and Loop Recording. Copy the file to a computer before attempting any reset or deletion. Contact support if the issue continues.

13 Technical specifications

The following are the current supplier manual specifications for the PMD5. Actual endurance and recording capacity depend on recording mode, battery condition, firmware, settings and conditions of use.

Item	Specification
Product	PatrolMaster Series PMD5 body-worn camera
Capacity versions	64GB or 128GB built-in storage, as marked on the device
Lens	F2.2; high-resolution multilayer-filter wide-angle lens
Digital zoom	128× digital zoom (supplier manual specification)
User interface languages	Simplified Chinese and English
Video resolutions	2304×1296 / 30 fps; 1920×1080 / 30 fps; 1280×720 / 60 fps; 1280×720 / 30 fps; 848×480 / 30 fps
Video file format	MOV
Video compression	H.264
Video bitrate	8 Mbit/s (supplier manual specification; may vary by mode)
Power input	USB Type-C; DC 5V / 2A
Battery	Built in
Standby duration	24 hours (manufacturer-tested specification)
Continuous operating duration	15 hours (manufacturer-tested specification; varies with use conditions)
Recording segment length	5 / 10 / 15 / 20 / 30 minutes
Water/dust protection	Supplier manual describes “professional grade”; no numeric IP code is specified in the source
Drop resistance	2 m free fall (manufacturer specification)
Storage temperature	-40°C to +60°C (-40°F to +140°F)
Operating temperature	-10°C to +45°C (+14°F to +113°F)
Computer transfer	Windows PC or Mac via USB-C; owner-tested file copy and playback; USB/OS settings vary

STORAGE VS. BATTERY Hours of video that fit in 64GB or 128GB of storage are not the same as the number of hours the device can run on one battery charge. Do not infer a 12-hour shift guarantee from capacity alone.

14 Care, service and operating limitations

Routine care

- Charge fully before important use and store away from excessive heat and moisture.
- Periodically verify date/time, storage capacity, battery level, video resolution and recording function.
- Review and securely back up recordings regularly. Use a workplace retention policy if several employees share cameras.
- Do not use rough tools or apply excessive pressure to the reset opening or USB-C connector.
- Do not attempt internal battery replacement or other repair unless qualified and authorized to do so; contact support for service options.

Recording and legal use

Recording can be interrupted by device failure, lack of power, full storage or mounting issues. The product does not replace insurance, a professional evidence-management system or workplace procedures. Use video and audio in compliance with applicable law, consent rules and company policies. Neither the recording equipment nor this manual guarantees that any footage will be admitted in court.

Before sending in for repair

Copy files you wish to preserve before requesting service. A repair or replacement may make stored recordings inaccessible or result in loss of data. OmniMaster does not provide a guaranteed data recovery service. Contact support for instructions before shipping a device; do not ship equipment to a general business correspondence address without approval.

Manual revision and firmware

Menu layout and terminology may vary following firmware updates or production changes. Refer to the controls and confirmed features for your particular PMD5; if behavior differs from this guide, contact OmniMaster support with the device version shown under VER.

15 United States limited warranty

This limited warranty is provided by Penghui LLC, operating the OmniMaster brand, for qualifying PatrolMaster Series PMD5 products purchased through an authorized United States sales channel. It does not replace the return rules of the marketplace or retailer from which the product was purchased.

Product	Limited warranty period
PMD5 camera main unit (including the internal battery for manufacturing defects)	12 months from original retail purchase
Included accessories (USB-C cable, short clip, long clip)	3 months from original retail purchase

What is covered

Defects in materials or workmanship arising during normal, intended use within the applicable coverage period. For an eligible claim, OmniMaster will evaluate the issue and arrange a reasonable repair, equivalent replacement or other remedy as required by applicable law. Replacement or repair does not automatically restart the original coverage period; any additional statutory rights remain unaffected.

What is generally not covered

Damage caused by accidents, misuse, unsuitable electrical input, excessive heat, liquid entry, crushing or other external forces; normal cosmetic wear and ordinary battery capacity reduction; damage that is actually caused by improper repairs, modifications or incompatible parts; disasters such as fire, flood or lightning; and damage occurring in return transit. The mere use of third-party parts or service does not automatically void the warranty; any exclusion must be related to the defect or damage at issue, consistent with applicable law.

How to obtain warranty service

1. Contact support@omnimaster.us with your purchase date, order or receipt reference, PMD5 capacity and a short description of the problem. Photos or a brief demonstration video may help.

2. Follow the troubleshooting instructions provided. Do not include sensitive recording content unless a secure transfer process has been agreed.

3. If service or return is required, obtain the approved service/shipping instructions first. Do not ship directly to a correspondence address.

4. For covered repairs under the original supplier shipping arrangement, the sender normally pays shipping in its outgoing direction: the customer ships to the designated facility and OmniMaster ships the repaired or replacement item back, except where applicable law or a written service arrangement requires otherwise. Any other fees must be disclosed before work proceeds.

Proof of purchase and eligibility

Keep a paper or electronic receipt showing the original purchase date. A separate paper warranty card is not required or included. If the date cannot be established, the manufacturing date may be considered where law permits; absence of a paper card by itself is not grounds for refusing an otherwise eligible claim. Coverage is intended for the original purchaser, subject to rights that cannot be excluded by law.

Recorded data, legal rights and questions

Back up important files before any service. No guarantee is made that recordings can be recovered. This limited warranty does not exclude rights or remedies that cannot legally be excluded. It gives you specific legal rights, and you may also have other rights that vary from state to state.

SUPPORT For warranty assistance, questions about your PMD5 model or setup, contact support@omnimaster.us. Website: omnimaster.us.

Quick reference

Common button actions

From	Action	Function
Powered off	Hold Power ~3 sec	Turn camera on
Powered off	Hold red Video ~3 sec	Power on and start video recording
Powered on	Press red Video	Start / stop video recording
Powered on / Manual IR	Hold red Video	Infrared night vision on / off
Powered on	Press PTT	Switch video resolution
Preview	Press Down	Playback categories
Preview	Press Audio	Audio-only recording
Preview	Hold Audio	White flashlight on / off
Preview	Press Photo	Take a photo
Preview	Hold Photo	Laser aiming light on / off
Powered on	Hold Power ~3 sec	Turn camera off

If you need help

OmniMaster Support

Product: PatrolMaster Series PMD5 body-worn camera

64GB: B07T8YPMRT • 128GB: B0831V8RJL

Email: support@omnimaster.us

Web: omnimaster.us

REMEMBER Back up valuable footage, review camera date/time and Loop Recording settings, and confirm that files saved to a computer will play normally.

Manual edition 1.1 • November 2026 • English (United States)