Saved from manuals.plus.
Open the live page for links to other documents and user manuals.

Tecnolite 8HLED1181MV30N

Tecnolite Square LED Outdoor Wall Sconce User Manual

Model: 8HLED1181MV30N

1. Product Overview

The Tecnolite Square LED Outdoor Wall Sconce (Model: 8HLED1181MV30N) is an 8-watt integrated LED fixture designed for exterior use. It provides a soft warm light, enhancing the ambiance of outdoor spaces. With an IP65 rating, it is protected against dust and water jets, making it suitable for various weather conditions. This non-dimmable fixture offers high luminous efficiency and a long lifespan, providing reliable illumination for years.



Image: The Tecnolite Square LED Outdoor Wall Sconce shown alongside its product packaging, highlighting its compact design and the brand's presentation.

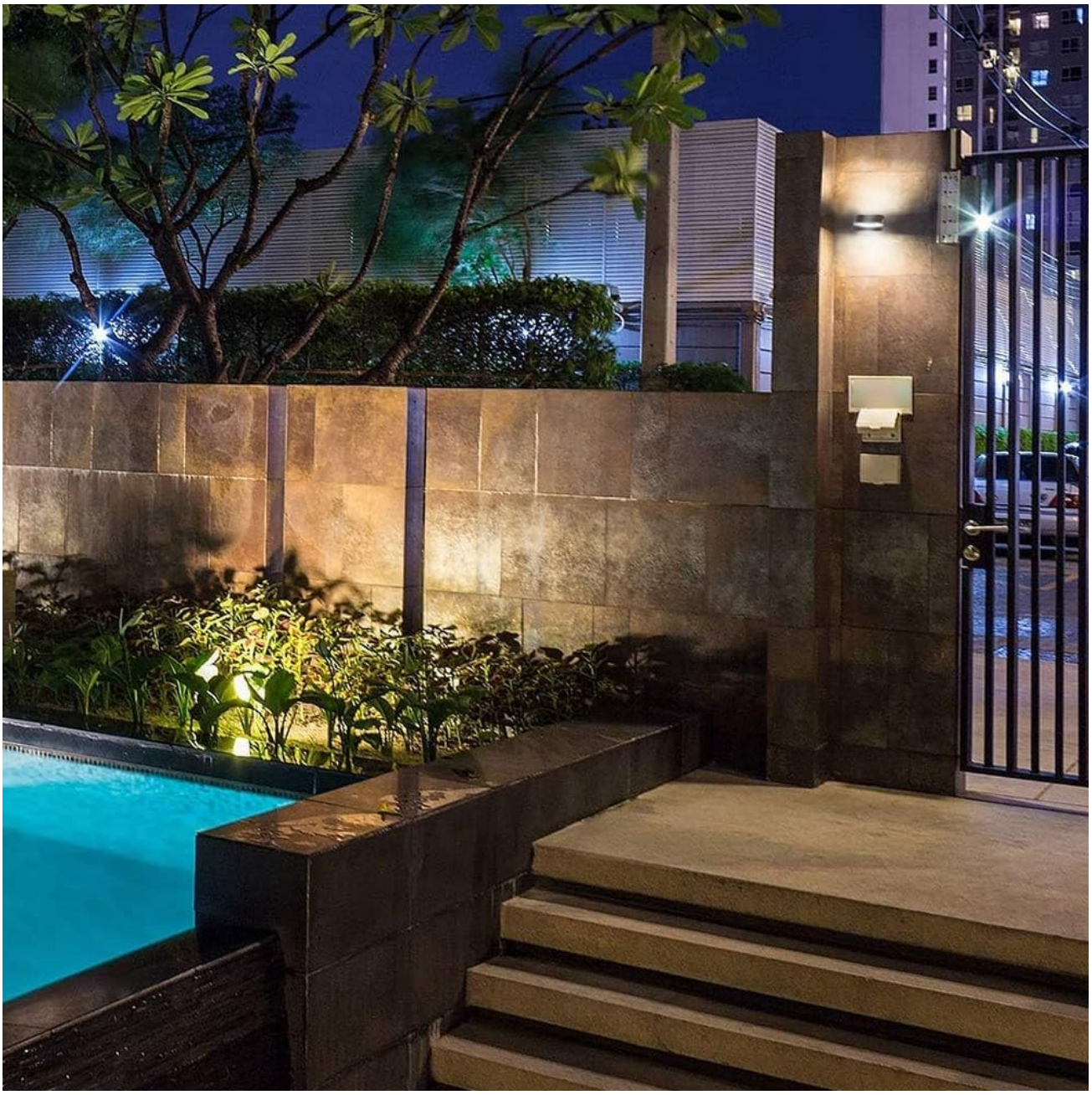

Image: Two Tecnolite Square LED Outdoor Wall Sconces installed on an exterior wall, illuminating a pathway and garden area at night, demonstrating their effective light distribution.

2. Safety Information

Please read all instructions carefully before installation and use. Failure to follow these instructions may result in electric shock, fire, or other hazards.

- Always disconnect power at the circuit breaker before installing, servicing, or cleaning the fixture.
- This product must be installed in accordance with the applicable installation code by a person familiar with the construction and operation of the product and the hazards involved.
- Ensure all electrical connections are secure and comply with local codes and ordinances.
- Do not modify the fixture in any way. Any modifications will void the warranty and may create a safety hazard.
- This fixture is rated IP65 for outdoor use. Ensure proper sealing during installation to maintain its water resistance.
- Do not look directly into the LED light source when the fixture is illuminated.

3. Package Contents

Verify that all components are present before beginning installation:

- 1 x Tecnolite Square LED Outdoor Wall Sconce
- 1 x Installation Kit (screws, anchors, connectors)
- 1 x User Manual

4. Specifications

Feature	Specification
Manufacturer	Tecnolite
Part Number	8HLED1181MV30N
Color	Black
Style	Square
Material	Aluminum
Shape	Square
Power Source	Corded Electric
Voltage	127 Volts
Wattage	8 Watts
Installation Method	Surface Mount
Bulb Type	LED (Integrated)
Luminous Flux	600 lm
Plug Profile	Wall Mount
Switch Style	Rocker or Push Button (External)
Usage	Outdoor
Batteries Required?	No
Length	13.9 cm
Width	13.9 cm
Height	5.2 cm
Product Dimensions	13.9 x 13.9 x 5.2 cm; 490 g
Estimated Lifespan	Up to 20 years (30,000 hours)

5. Installation Guide

This fixture is designed for surface mounting. Professional installation is recommended. Ensure power is disconnected before proceeding.



Image: The Tecnolite Square LED Outdoor Wall Sconce held in a hand, illustrating its compact size and showing its length (139mm) and height (52mm) dimensions.

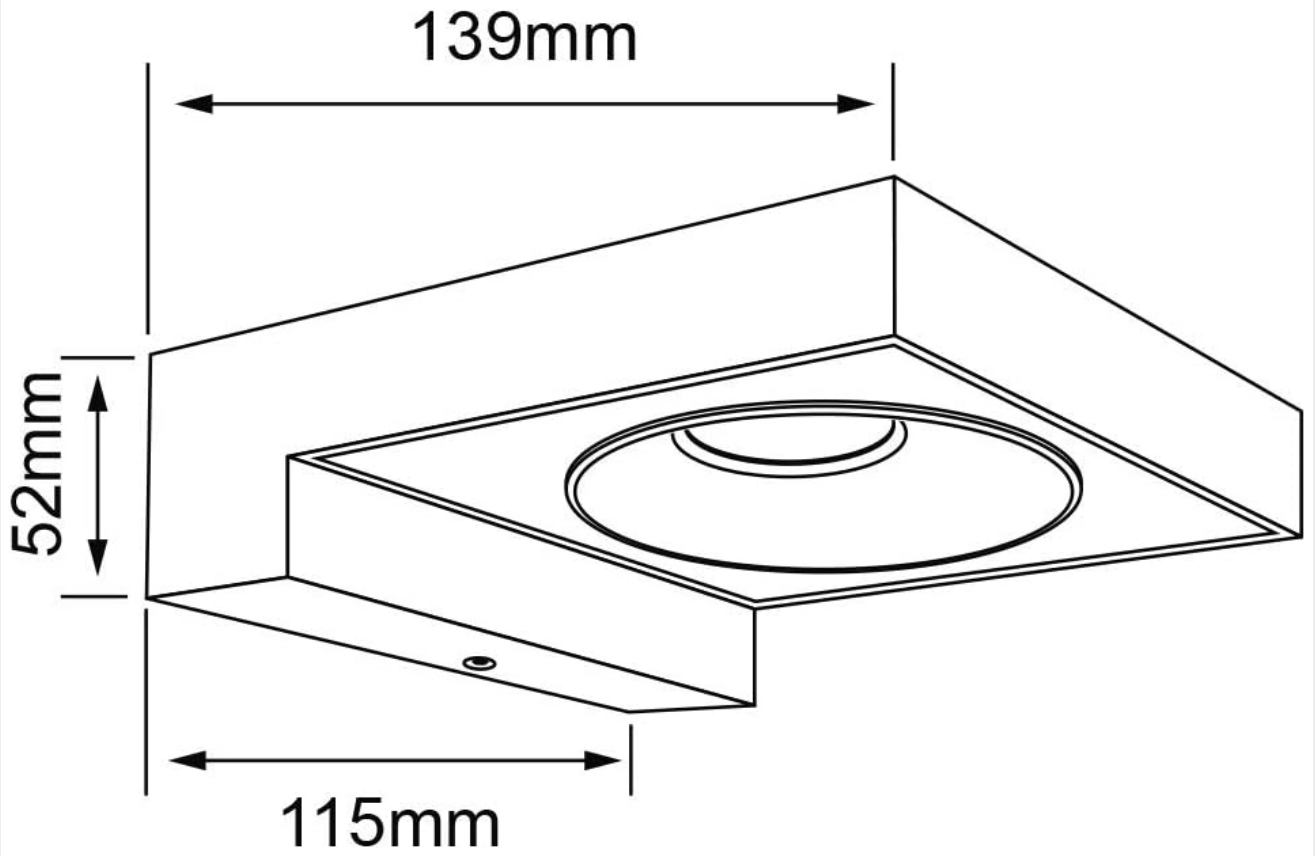

Image: A technical diagram of the Tecnolite Square LED Outdoor Wall Sconce, providing precise measurements for length (139mm), height (52mm), and depth (115mm) for accurate installation planning.

Installation Steps:

1. **Prepare the Installation Area:** Turn off power at the main circuit breaker. Identify the desired mounting location on the wall.
2. **Mark Drilling Points:** Use the fixture's mounting bracket (if separate) or the fixture itself as a template to mark the drilling points on the wall. Refer to the dimension diagram for precise measurements.
3. **Drill Holes:** Drill pilot holes at the marked points. Insert wall anchors if necessary, depending on the wall material.
4. **Connect Wiring:** Carefully connect the fixture's wires to the household electrical wires. Ensure proper polarity (live to live, neutral to neutral, ground to ground). Use appropriate wire connectors.
5. **Mount the Fixture:** Secure the fixture to the wall using the provided screws. Ensure it is firmly attached and flush against the surface.
6. **Seal (Optional but Recommended):** For enhanced weather resistance, apply a bead of outdoor-rated silicone sealant around the edges of the fixture where it meets the wall, leaving a small gap at the bottom for drainage.
7. **Restore Power:** Once installation is complete and all connections are secure, turn the power back on at the circuit breaker.

6. Operation

The Tecnolite Square LED Outdoor Wall Sconce is designed for simple operation. Once properly installed and connected to a power source, it will illuminate when power is supplied to its circuit. Control the light using your existing wall switch or external timer/sensor connected to the circuit.



Image: A close-up view of the Tecnolite Square LED Outdoor Wall Sconce with its integrated LED light illuminated, showcasing the soft warm glow it emits.

7. Maintenance

The Tecnolite LED Wall Sconce requires minimal maintenance due to its durable construction and integrated LED technology.

- **Cleaning:** To clean the fixture, ensure power is off. Use a soft, damp cloth to wipe down the exterior. Do not use abrasive cleaners, solvents, or harsh chemicals, as these can damage the finish or electrical components.
- **Inspection:** Periodically inspect the fixture for any signs of damage, loose connections, or wear. If any issues are found, disconnect power and consult a qualified electrician.
- **LED Lifespan:** The integrated LED is designed for a long lifespan (up to 30,000 hours). It is not user-replaceable. If the LED fails, the entire fixture may need replacement.

8. Troubleshooting

If you encounter issues with your Tecnolite LED Wall Sconce, refer to the following common troubleshooting steps:

- **Light Does Not Turn On:**
  - Check the circuit breaker to ensure power is on.
  - Verify that the wall switch controlling the fixture is in the "ON" position.
  - Ensure all wiring connections are secure. If unsure, consult a qualified electrician.

- **Light Flickers:**
  - Check for loose wiring connections.
  - Ensure the voltage supply is stable and matches the fixture's requirements (127 Volts).
- **Water Inside Fixture:**
  - This indicates a breach in the IP65 seal. Disconnect power immediately.
  - Inspect the installation for proper sealing and ensure all screws are tightened. Re-seal if necessary. If damage is present, the fixture may need replacement.

9. Warranty and Support

The Tecnolite Square LED Outdoor Wall Sconce is built for durability and longevity, with an estimated lifespan of up to 20 years (based on an average use of 4 hours per day), or up to 30,000 hours of operation.

For specific warranty information, please refer to the warranty card included with your product or visit the official Tecnolite website. Extended warranty options may also be available through third-party providers, such as Assurant, for additional coverage.

For technical support, replacement parts, or further assistance, please contact Tecnolite customer service or visit the Tecnolite brand store on Amazon:

Visit Tecnolite Store on Amazon

© 2024 Tecnolite. All rights reserved.
This manual is for informational purposes only. Specifications are subject to change without notice.

Ask a question about this manual

Ask about setup, troubleshooting, compatibility, parts, safety, or missing instructions. Manuals+ will review the question and use this page's manual context to help answer it.

Name

Anonymous

Email

you@example.com

After a successful submission, we securely hash the supplied account or form email before sending it to Microsoft Advertising for conversion attribution. Privacy details.

Question

Example: How do I reset this device or fix this error?

Details

Model number, symptoms, what you tried, or the section of the manual you are using.

Submit question

Open the live page

https://manuals.plus/asin/B07YXKLG66

More documents and user manuals: **https://manuals.plus/**