Saved from manuals.plus.
Open the live page for links to other documents and user manuals.

Tecnolite 30LQLED65MVN

Tecnolite 30LQLED65MVN Outdoor LED Floodlight User Manual

Model: **30LQLED65MVN**

Brand: Tecnolite

1. Product Overview

The Tecnolite 30LQLED65MVN is an integrated LED outdoor floodlight designed to provide powerful and efficient illumination for various outdoor applications. This floodlight features a high luminous flux and a long lifespan, making it a reliable lighting solution.

Key Features:

- Power: 30 Watts
- Voltage: 100 - 240 V
- Light Color: Daylight White (6500 K)
- Luminous Flux: 3000 lumens
- Equivalent to a 250 Watt incandescent lamp
- Estimated Lifespan: Up to 18 years (based on 3 hours/day usage), up to 20,000 hours
- Material: Aluminum
- Designed for outdoor use



Figure 1: The Tecnolite 30LQLED65MVN LED Floodlight shown with its retail packaging. The packaging highlights the brand "Tecnolite" and the model number "30LQLED65MVN".

2. Safety Information

Please read all safety instructions carefully before installation and operation. Failure to follow these instructions may result in electric shock, fire, or other hazards.

- **Electrical Safety:** Ensure power is turned off at the circuit breaker before installation or maintenance. All wiring should be performed by a qualified electrician and comply with local electrical codes.
- **Outdoor Use:** This product is designed for outdoor use. Ensure all connections are waterproof and protected from environmental elements.
- **Mounting:** Mount the floodlight securely to a stable surface. Do not install on unstable or vibrating surfaces.
- **Heat:** The LED floodlight may become warm during operation. Do not touch the light surface directly when it is on.
- **Eye Protection:** Do not stare directly into the light source when it is illuminated, as it may cause eye strain or damage.
- **Ventilation:** Ensure adequate ventilation around the fixture to prevent overheating.

3. Setup and Installation

The Tecnolite 30LQLED65MVN floodlight is designed for wall mounting. Follow these steps for proper installation:

1. **Prepare the Installation Area:**
    - Turn off the main power supply at the circuit breaker before beginning any electrical work.
    - Choose a suitable mounting location that can support the weight of the floodlight and provides the desired illumination area.
2. **Mounting the Bracket:**
    - The floodlight comes with an integrated mounting bracket. Position the bracket against the wall or mounting

surface.

- Mark the drilling points through the holes on the bracket.
- Drill appropriate holes for your mounting screws (screws not included, use suitable hardware for your surface type).
- Securely fasten the floodlight's bracket to the mounting surface. Ensure it is firm and stable.



Figure 2: The floodlight's compact size and dimensions (188mm width, 148mm height) are shown, indicating ease of handling and installation.

3. **Electrical Connection:**
    - Connect the floodlight's electrical wires to your main power supply wires. Typically, this involves connecting Live (L), Neutral (N), and Ground (GND) wires. Refer to local electrical codes for proper wiring.
    - Use appropriate waterproof connectors and junction boxes for outdoor installations to protect against moisture ingress.
    - Ensure all connections are tight and secure.
4. **Adjusting the Angle:**
    - Once mounted, you can adjust the angle of the floodlight by loosening the screws on the side of the bracket, tilting the light to the desired position, and then tightening the screws firmly.
5. **Restore Power:**
    - Once installation is complete and all connections are secure, restore power at the circuit breaker.
    - Test the floodlight to ensure it functions correctly.



Figure 3: An example of the floodlight installed in an outdoor setting, providing illumination for a garden area.

4. Operating Instructions

The Tecnolite 30LQLED65MVN LED Floodlight operates by direct electrical connection. Once properly installed and connected to a power source, its operation is straightforward:

- **Power On/Off:** The floodlight will turn on when power is supplied to its circuit and turn off when power is cut. This is typically controlled by a wall switch or an external timer/sensor connected to the circuit.
- **Automatic Operation (Optional):** If connected to a motion sensor or a dusk-to-dawn sensor (not included), the floodlight will operate automatically based on the sensor's settings.



Figure 4: The floodlight illuminated, showcasing its bright LED array designed for efficient outdoor lighting.

5. Maintenance

The Tecnolite 30LQLED65MVN LED Floodlight requires minimal maintenance due to its durable design and long-lasting LED technology.

- **Cleaning:** Periodically clean the surface of the floodlight with a soft, damp cloth to remove dust and dirt. Do not use abrasive cleaners or solvents, as they may damage the finish or optical components. Ensure the power is off before cleaning.
- **Inspection:** Regularly inspect the wiring and mounting for any signs of wear, damage, or loose connections. Address any issues promptly to ensure safe and reliable operation.
- **No User-Serviceable Parts:** The LED module and driver are integrated and not user-serviceable. Do not attempt to open or repair the unit.

6. Troubleshooting

If you encounter issues with your Tecnolite 30LQLED65MVN LED Floodlight, refer to the following common problems and solutions:

Problem	Possible Cause	Solution
Light does not turn on.	No power supply. Loose wiring connection. Faulty switch/sensor.	Check circuit breaker and power source. Verify all wiring connections are secure (ensure power is off first). Test the switch or sensor.
Light flickers or is dim.	Unstable power supply. Loose connection. Product nearing end of life.	Ensure stable voltage supply. Check and secure all wiring connections. If the product is old, consider replacement.
Water inside the fixture.	Improper sealing during installation. Damage to the fixture.	Ensure all seals and connections are properly waterproofed during installation. If damage is present, the unit may need replacement.

If the problem persists after attempting these solutions, please contact Tecnolite customer support.

7. Specifications

Attribute	Value
Manufacturer	Tecnolite
Part Number	30LQLED65MVN
Color	Daylight White
Style	Daylight
Material	Aluminum
Power Source	Corded Electric
Voltage	127 Volts (also listed as 100-240V in description)
Item Package Quantity	1
Bulb Type	LED
Luminous Flux	3000 lm
Plug Profile	Wall Mount
Usage	OUTDOOR
Included Components	Warranty, Installation Manual, LED Floodlight
Batteries Required?	No

Attribute	Value
Length	3.6 centimeters
Width	3.6 centimeters
Height	14.8 centimeters
Product Dimensions	3.6 x 3.6 x 14.8 cm; 750 g
Model Number	30LQLED65MVN
ASIN	B07YXKJQFX
First Available Date	September 11, 2019

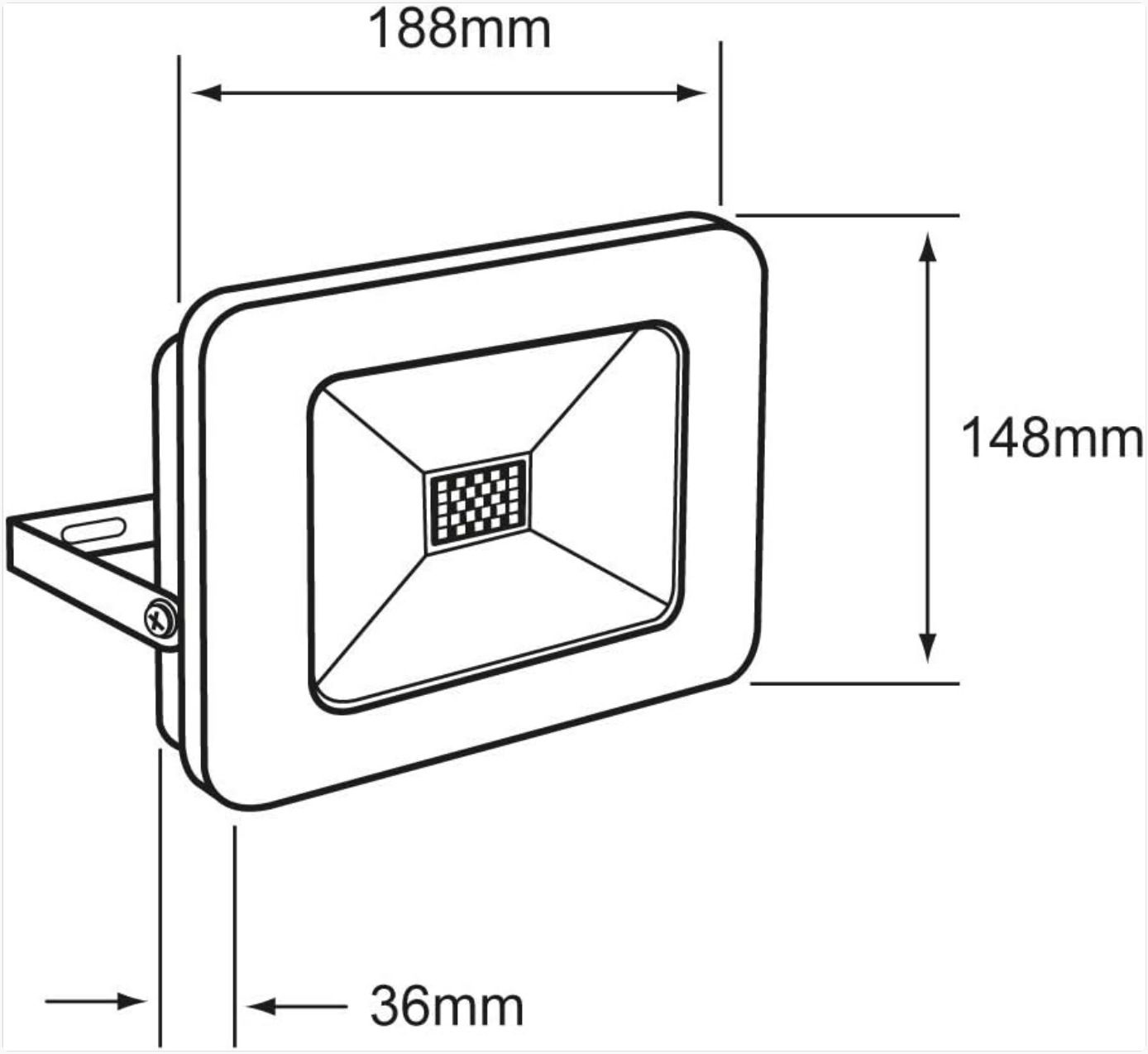

Figure 5: Technical drawing illustrating the dimensions of the floodlight: 188mm (width), 148mm (height), and 36mm (depth).

8. Warranty

This Tecnolite product includes a warranty. Please refer to the warranty information provided in the packaging or contact

Tecnolite customer support for details regarding warranty terms and conditions.
Note: The "Included Components" in the specifications list "Garantia" (Warranty).

9. Support

For technical assistance, troubleshooting beyond this manual, or warranty claims, please contact Tecnolite customer support.
Visit the official Tecnolite store for more information:Tecnolite Official Store
Please have your product model number (30LQLED65MVN) and purchase information ready when contacting support.

© 2024 Tecnolite. All rights reserved.

Ask a question about this manual

Ask about setup, troubleshooting, compatibility, parts, safety, or missing instructions. Manuals+ will review the question and use this page's manual context to help answer it.

Name

Anonymous

Email

you@example.com

After a successful submission, we securely hash the supplied account or form email before sending it to Microsoft Advertising for conversion attribution. Privacy details.

Question

Example: How do I reset this device or fix this error?

Details

Model number, symptoms, what you tried, or the section of the manual you are using.

Submit question

Open the live page

https://manuals.plus/asin/B07YXKJQFX

More documents and user manuals: **https://manuals.plus/**