Saved from manuals.plus.
Open the live page for links to other documents and user manuals.

Zenna Home 2153WW

Zenna Home Tension Pole Shower Caddy (Model 2153WW) - User Manual

Model: 2153WW | Brand: Zenna Home

Introduction

Thank you for choosing the Zenna Home Tension Pole Shower Caddy. This manual provides essential information for the safe assembly, operation, and maintenance of your new shower caddy. Please read it thoroughly before installation and keep it for future reference.



Image: Zenna Home Tension Pole Shower Caddy with 4 shelves, installed in a shower corner.

Safety Information

- Ensure all parts are securely assembled before placing items on the shelves.
- Do not overload the shelves. The maximum recommended weight is 20 pounds total.
- Verify the tension pole is firmly secured between the shower floor/tub and ceiling to prevent tipping.
- Keep small parts away from children during assembly.

Package Contents

Please check that all components are present before beginning assembly.



Image: All components of the shower caddy laid out.

- Tension Pole Sections (various lengths)
- 4 x Adjustable Shelves
- Tension Spring Mechanism
- End Caps/Feet
- Instruction Sheet (this manual)

Setup and Assembly

This shower caddy features tool-free assembly. For detailed 3D interactive instructions, download the free BILT app on your mobile device and scan the QR code below.



Image: Scan QR code for BILT 3D instructions.
Download the BILT app: https://sj83t.app.goo.gl/Mubc

Step-by-Step Assembly:

1. **Measure Height:** Determine the height of your shower space from the floor/tub to the ceiling. The caddy adjusts from 60 to 97 inches (5 feet to 8 feet, 1 inch).
2. **Assemble Pole Sections:** Connect the appropriate pole sections to achieve a height slightly taller than your measured space. The top section contains the tension spring.
3. **Attach Shelves:** Slide the four shelves onto the pole sections. The shelves can be positioned at any desired height and secured by rotating them into place. Ensure the shelves are facing the corner.
4. **Install Caddy:** Compress the top pole section (with the spring) and position the caddy vertically in the corner of your shower. Release the tension, allowing the pole to expand and firmly secure itself between the floor/tub and ceiling.
5. **Adjust and Secure:** Adjust the height and rotation of each shelf as needed. Ensure the entire unit is stable and does not wobble.



Image: Assembly diagram for the tension pole.

Product Features Overview:

▶ **Watch video online**

Quick video of features for Zenna Home Shower Tension Pole Caddy

Video: Quick overview of the Zenna Home Shower Tension Pole Caddy features, including adjustable baskets and no-tools assembly.

Operating Instructions

- **Adjusting Shelf Height:** To reposition a shelf, gently lift it slightly, rotate it to loosen its grip on the pole, slide it to the desired height, and then rotate it back to secure it firmly.
- **Loading Shelves:** Place your bath and toiletry items on the shelves. Distribute weight evenly to maintain stability.

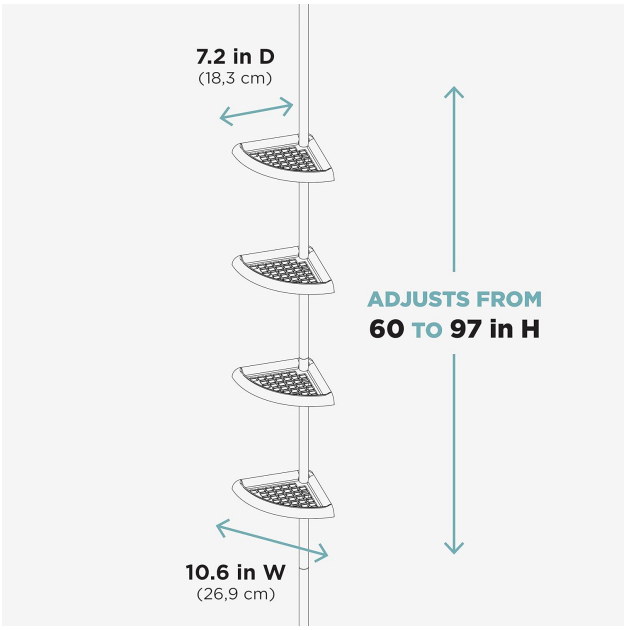

Image: Adjustable shelves accommodate various bottle sizes.

Maintenance and Care

- **Cleaning:** Clean the caddy regularly with mild soap and water. Avoid abrasive cleaners or scrubbers that could damage the finish.
- **Rust Resistance:** The caddy is constructed from durable plastic with a rust-resistant finish. Regular cleaning helps maintain its appearance and longevity.
- **Self-Draining Shelves:** The shelves are designed with drainage holes to prevent water accumulation and keep items dry.



Image: Self-draining shelves.



Image: Rust-resistant finish.

Troubleshooting

- **Caddy is Wobbly:**
  - Ensure the tension pole is fully extended and firmly pressed against both the floor/tub and ceiling.
  - Check that the pole sections are securely connected.
  - Verify that the shelves are properly tightened and not loose.
- **Shelves Slide Down:**
  - Ensure the shelves are rotated firmly into their locked position on the pole.
  - Avoid overloading individual shelves beyond their capacity.
- **Difficulty Assembling:**
  - Refer to the BILT app for interactive 3D instructions.
  - Double-check that you are using the correct pole sections for your shower height.

Specifications

Brand	Zenna Home
Model Number	2153WW
Material	Plastic
Color	White
Dimensions (D x W x H)	7.2"D x 10.6"W x 60-97"H (Adjustable)
Item Weight	16 ounces
Number of Shelves	4
Mounting Type	Tension Mount
Maximum Weight Recommendation	20 pounds

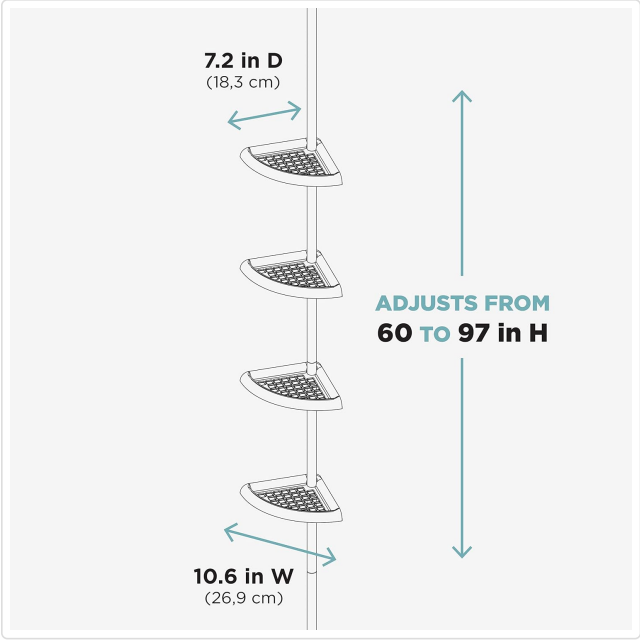

Image: Product dimensions.

Warranty and Support

For warranty information and customer support, please visit the official Zenna Home website or contact their customer service directly. Keep your proof of purchase for any warranty claims.

Zenna Home Website: Visit Zenna Home Store on Amazon

© 2023 Zenna Home. All rights reserved.

Ask a question about this manual

Ask about setup, troubleshooting, compatibility, parts, safety, or missing instructions. Manuals+ will review the question and use this page's manual context to help answer it.

Name

Anonymous

Email

you@example.com

After a successful submission, we securely hash the supplied account or form email before sending it to Microsoft Advertising for conversion attribution. Privacy details.

Question

Example: How do I reset this device or fix this error?

Details

Model number, symptoms, what you tried, or the section of the manual you are using.

Submit question

Open the live page

https://manuals.plus/asin/B07X5X6R26

More documents and user manuals: **https://manuals.plus/**