Saved from manuals.plus.
Open the live page for links to other documents and user manuals.

WAVLINK WL-WN572HP3

WAVLINK AC1200 Outdoor WiFi Range Extender User Manual

Model: WL-WN572HP3
Brand: WAVLINK

1. Product Overview

The WAVLINK AC1200 WL-WN572HP3 is a high-power outdoor weatherproof WiFi range extender, access point, router, and mesh device. It features dual-band operation (2.4GHz at 300Mbps and 5.8GHz at 867Mbps) and is designed to provide robust wireless connectivity in outdoor environments. Its integrated Passive Power over Ethernet (PoE) support allows for flexible deployment in locations without immediate power outlets.

Key Features:

- Dual Band AC1200: Supports speeds up to 300Mbps on 2.4GHz and 867Mbps on 5.8GHz.
- High Transmission Power: Designed for extended range and strong signal penetration.
- Weatherproof Design: Features a robust case with IP65-rated weatherproofing, heat-resistance, and built-in 15kV ESD / 4KV lightning protection.
- Passive PoE Support: Allows for power and data transmission over a single Ethernet cable, enabling flexible installation up to 60 meters from the power source.
- Multiple Operation Modes: Functions as an Access Point (AP), Repeater, Router, or Mesh device. AP mode also supports Client and Client+Repeater configurations.
- Dual Gigabit Ethernet Ports: Includes one 10/100/1000Mbps LAN port and one 10/100/1000Mbps WAN/LAN port for high-speed wired connections.
- Detachable Omni-Directional Antennas: Equipped with four 7dBi antennas for optimized signal coverage.

Package Contents:

- WAVLINK WL-WN572HP3 Outdoor WiFi Unit
- 4 x 7dBi Detachable Omni-Directional Antennas (2 for 5GHz, 2 for 2.4GHz)
- Passive PoE Injector (Power Supply)
- Ethernet Cable (Cat5)
- Mounting Kit (Zip ties, screws, and anchors)
- Quick Installation Guide / Instruction Manual
- Warranty Card / Information

Product Diagram:



Figure 1: WAVLINK AC1200 Outdoor WiFi Unit with four detachable antennas.

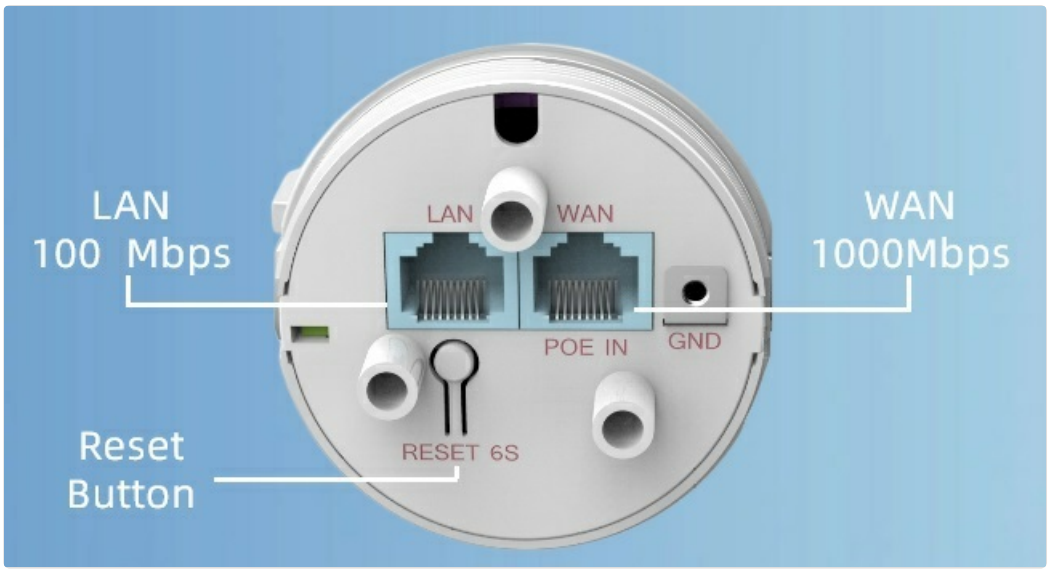

Figure 2: Bottom view of the WAVLINK unit showing LAN (100 Mbps), WAN (1000 Mbps), PoE IN, GND, and Reset Button.

2. Setup and Installation

This section provides general guidelines for setting up your WAVLINK outdoor WiFi device. For detailed steps, refer to the included Quick Installation Guide.

2.1 Physical Installation:

The WL-WN572HP3 is designed for outdoor use and can be mounted on a pole or wall. Ensure the mounting location provides optimal line-of-sight to the desired coverage area and is within 60 meters of a power source for PoE connection.

- Attach the four detachable antennas to the corresponding ports on the device. Ensure the 5GHz antennas are connected to the 5GHz ports and 2.4GHz antennas to the 2.4GHz ports.
- Use the provided mounting kit (zip ties, screws, and anchors) to securely fasten the device to a stable outdoor structure.
- Connect one end of the Ethernet cable to the "PoE IN" port on the WAVLINK unit.
- Connect the other end of the Ethernet cable to the "PoE" port on the Passive PoE Injector.
- Plug the power supply into the PoE Injector and then into a power outlet.
- Connect another Ethernet cable from the "LAN Data In" port on the PoE Injector to your router or network switch, depending on the desired operating mode.

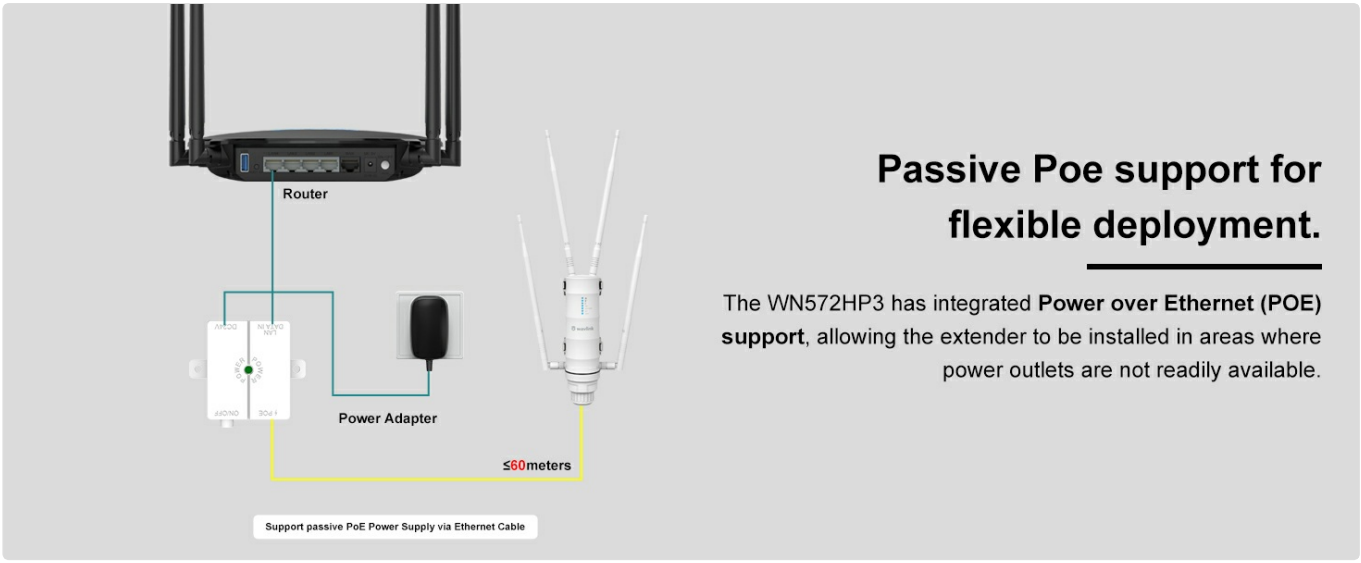

Figure 3: Passive PoE connection for flexible deployment, allowing power and data over a single Ethernet cable up to 60 meters.



Figure 4: Product dimensions for installation planning.

3. Operating Modes

The WAVLINK WL-WN572HP3 supports various operating modes to suit different network requirements. Configuration is typically done via a web-based interface accessible through a connected computer.

3.1 Router Mode:

In Router Mode, the device acts as a primary router, connecting directly to your internet source (e.g., modem) and providing network access to connected devices. It creates a new private network.

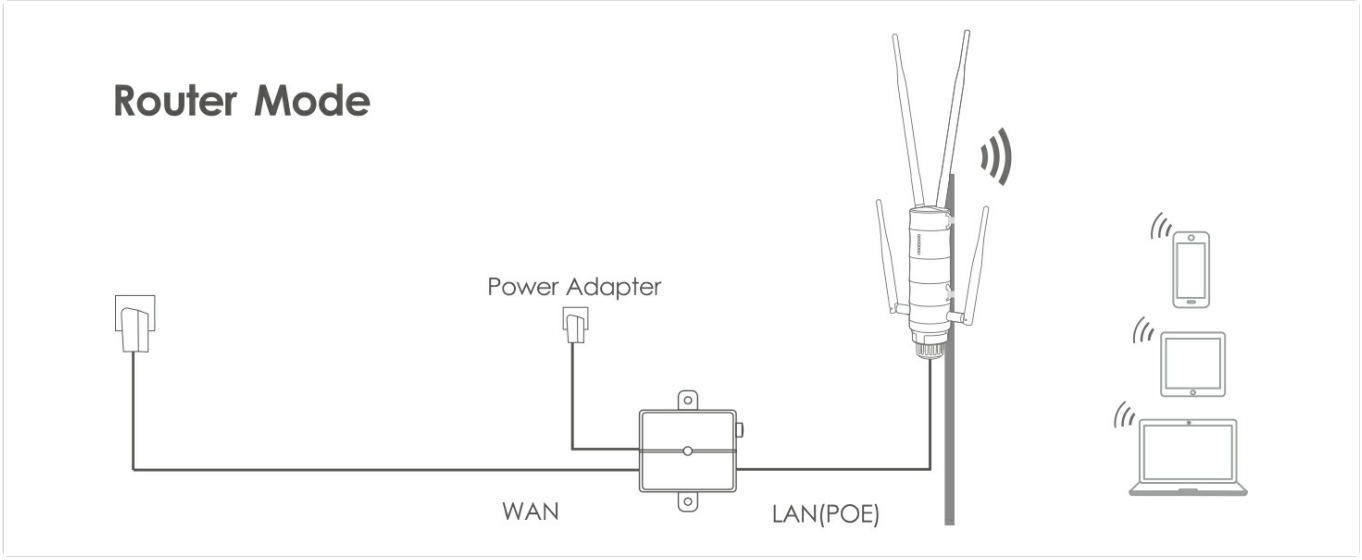

Figure 5: Router Mode setup, connecting the device to the internet and broadcasting WiFi.

3.2 Repeater Mode:

Repeater Mode extends the coverage of an existing wireless network. The device receives the signal from your main router and re-broadcasts it, effectively expanding the WiFi range.

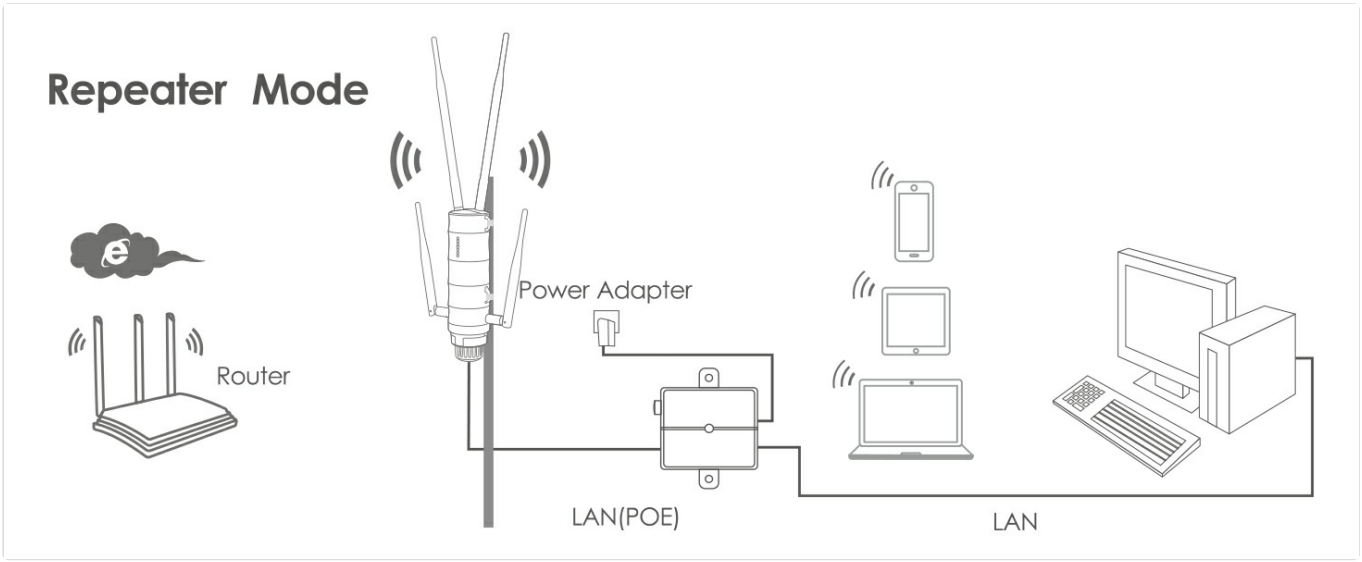

Figure 6: Repeater Mode setup, extending an existing WiFi signal.

3.3 Access Point (AP) Mode:

In AP Mode, the device connects to an existing wired network and broadcasts a wireless signal, allowing wireless devices to connect to the wired network. This mode is ideal for adding wireless capability to a wired-only network or extending a wired network wirelessly.

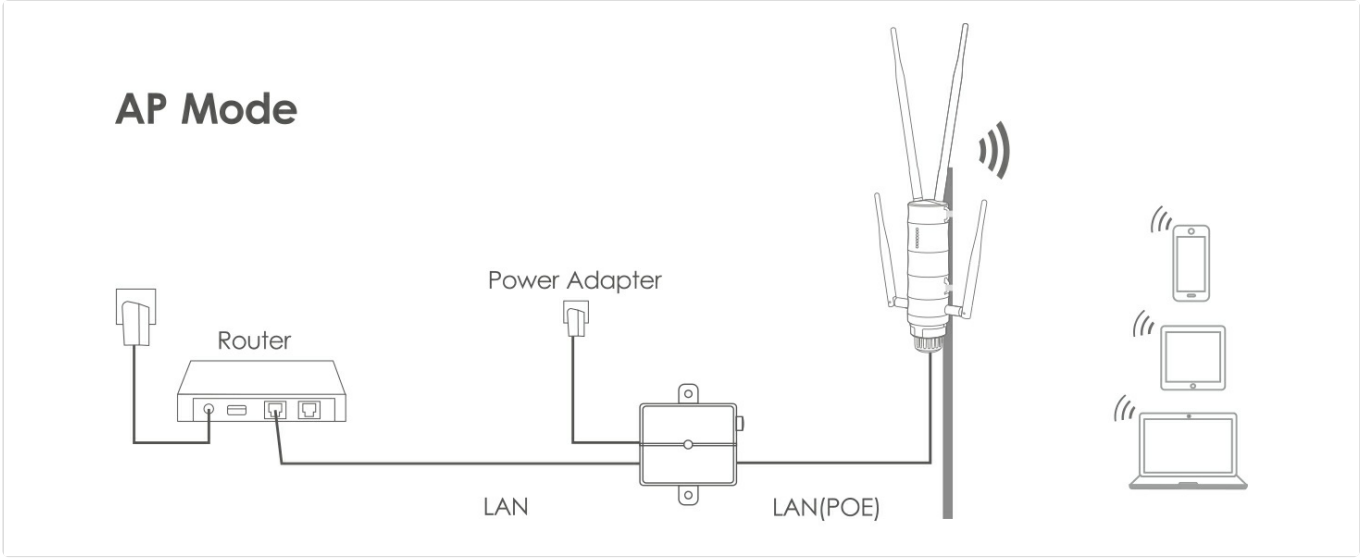

Figure 7: AP Mode setup, converting a wired connection to a wireless access point.

3.4 WISP Mode:

WISP (Wireless Internet Service Provider) Mode allows the device to connect wirelessly to an ISP's access point and share that internet connection with multiple clients, either wirelessly or via Ethernet ports. It acts as a client to the WISP and a router for local clients.

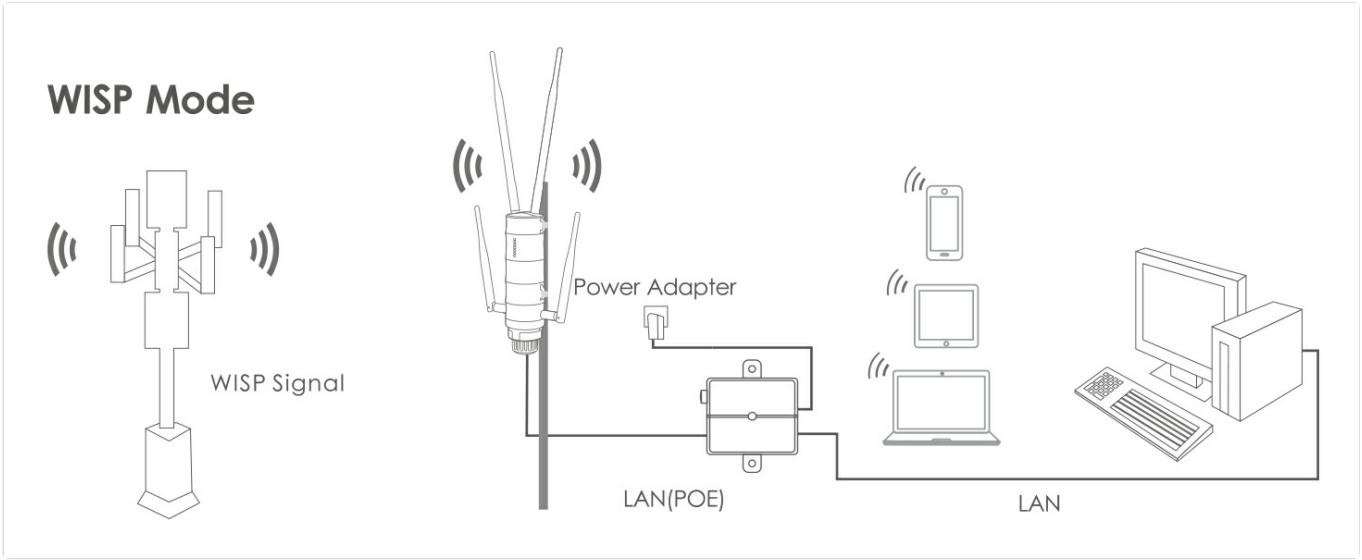

Figure 8: WISP Mode setup, connecting to a WISP signal and providing local network access.

4. Specifications

Attribute	Detail
Model Number	WL-WN572HP3
Wireless Communication Standard	802.11a/b/g/n/ac
Frequency Band Class	Dual-Band (2.4GHz & 5.8GHz)

Attribute	Detail
Data Transfer Rate	Up to 1200Mbps (300Mbps 2.4GHz + 867Mbps 5.8GHz)
Antennas	4 x 7dBi Detachable Omni Directional Antennas
Ethernet Ports	Dual Gigabit (10/100/1000Mbps) LAN/WAN RJ45
Power Supply	Integrated Passive Power over Ethernet (PoE)
Weatherproofing	IP65-rated, Heat-resistance, Waterproof, Anti-dust, Anti-freezing
Lightning Protection	Built-in 15kV ESD, 4KV Lightning Protection
Product Dimensions	7.09 x 1.97 x 1.97 inches
Item Weight	1.4 pounds
Manufacturer	WAVLINK
Date First Available	August 26, 2019

5. Maintenance

To ensure optimal performance and longevity of your WAVLINK outdoor WiFi device, consider the following basic maintenance points:

- **Regular Cleaning:** Periodically clean the exterior of the device to remove dust, dirt, and debris that may accumulate, especially around the antenna connections and ports. Use a soft, dry cloth.
- **Firmware Updates:** Check the official WAVLINK website for the latest firmware updates. Keeping the firmware updated can improve performance, add new features, and address security vulnerabilities.
- **Environmental Protection:** While the device is weatherproof, ensure it is installed in a location that minimizes direct exposure to extreme weather conditions where possible. Note that the PoE part of the router is not waterproof and should be protected from moisture.
- **Cable Integrity:** Regularly inspect Ethernet cables and connections for any signs of wear, damage, or corrosion. Damaged cables can lead to signal degradation or power issues.
- **Antenna Security:** Ensure antennas remain securely fastened and are not loose, which could affect signal strength and stability.

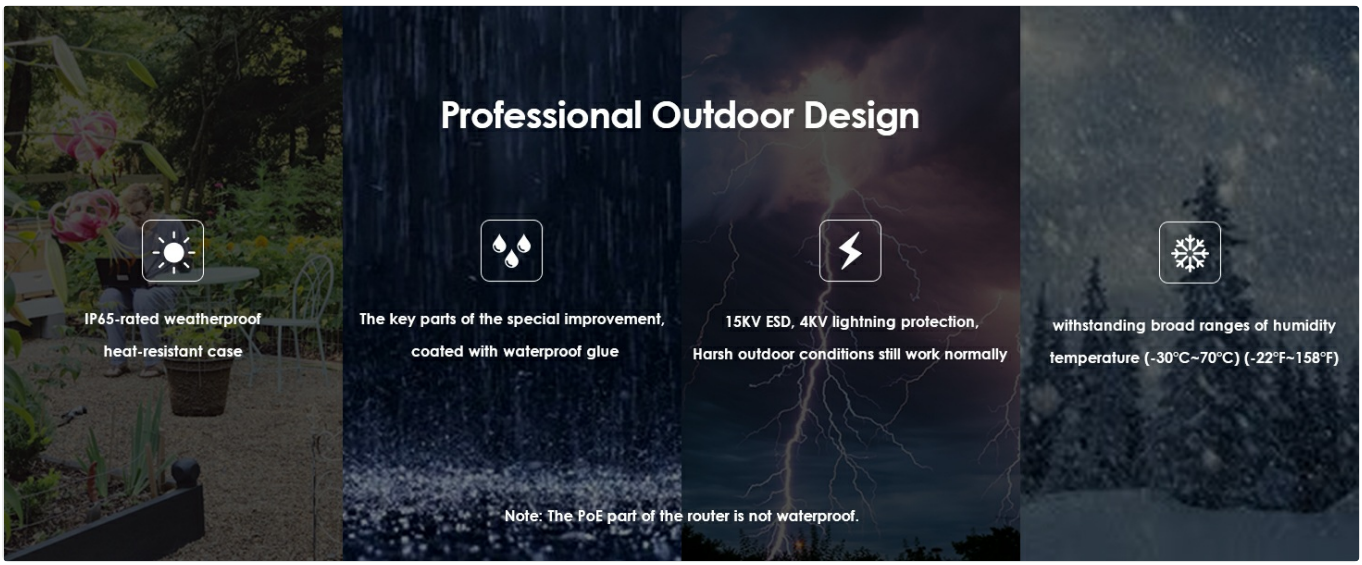

Figure 9: Overview of the device's professional outdoor design features, highlighting its durability.

6. Troubleshooting

If you encounter issues with your WAVLINK outdoor WiFi device, try the following basic troubleshooting steps:

- **No Power:** Ensure the PoE injector is properly connected to a power outlet and the Ethernet cable is securely connected to both the injector and the device's PoE IN port. Check the power LED on the device.
- **No Internet Access:** Verify that your main internet source (modem/router) is working correctly. Check all Ethernet cable connections. If in Repeater or WISP mode, ensure the device is successfully connected to the upstream WiFi network.
- **Weak Signal/Poor Performance:**
  - Check antenna connections and orientation.
  - Relocate the device to a more central position or higher elevation to reduce obstructions.
  - Minimize interference from other electronic devices or neighboring WiFi networks.
  - Ensure the correct operating mode is selected and configured.
- **Cannot Access Web Management Page:** Ensure your computer is connected to the device (either directly via Ethernet or wirelessly). Verify the IP address and gateway settings. Try resetting the device to factory defaults (refer to the manual for reset procedure).
- **Device Not Responding:** Disconnect the power from the PoE injector for 10 seconds, then reconnect it. If the issue persists, perform a factory reset using the reset button (refer to the manual for specific instructions).

7. Official Product Videos

Watch the official product video for an overview of the WAVLINK Outdoor WiFi Router - AERIAL H Series.

Your browser does not support the video tag.

Video 1: WAVLINK Outdoor WIFI Router - AERIAL H Series. This video provides a visual introduction to the features and capabilities of

the AERIAL H series, including its outdoor design and various modes of operation.

8. Warranty and Support

WAVLINK products typically come with a 12-month warranty. For specific warranty terms and conditions, please refer to the warranty card included in your package or visit the official WAVLINK website.

For technical support, product inquiries, or further assistance, please contact WAVLINK customer support:

- **Phone:** +1 8889730883 (UTC-5) Mon - Fri 9AM - 6PM
- **Email:** Contact@wavlink.com
- **Official Website:** www.wavlink.com

© 2024 WAVLINK. All rights reserved.

Ask a question about this manual

Ask about setup, troubleshooting, compatibility, parts, safety, or missing instructions. Manuals+ will review the question and use this page's manual context to help answer it.

Name

Anonymous

Email

you@example.com

After a successful submission, we securely hash the supplied account or form email before sending it to Microsoft Advertising for conversion attribution. Privacy details.

Question

Example: How do I reset this device or fix this error?

Details

Model number, symptoms, what you tried, or the section of the manual you are using.

Submit question

Open the live page

https://manuals.plus/asin/B07X3KXK7Z

More documents and user manuals: **https://manuals.plus/**