Saved from manuals.plus.
Open the live page for links to other documents and user manuals.

Huarntwo PP204 HA3004

Huarntwo PP204 HA3004 1/2" Rotor Kit Instruction Manual

Model: PP204 HA3004 | Brand: Huarntwo

1. Product Overview

This Huarntwo PP204 HA3004 1/2" Rotor Kit is a replacement part designed for various heater models. The kit includes the rotor, vanes, and insert, with a rotor thickness of 1/2" and a diameter of 2 1/8". It is compatible with a wide range of brands and models, ensuring proper function and air pressure for your heating unit.
Compatible with:

- Desa, Reddy, Master, Remington, Knipco, Koehring, Dayton, and many more.
- GHP models (SP-KFA1000, SPKFA1000, KFA1000).
- Mi-T-M models (68-3043).
- Pinnacle models (70-022-0100, 700220100, 71-022-1300, 710221300).

2. Setup and Installation

Proper installation of the rotor kit is crucial for optimal heater performance. Please measure the thickness of your existing rotor or rotor steel ring to ensure you have the correct part before proceeding.

Installation Steps:

1. Remove the upper shell of the heater.
2. Using a 5/16" nut driver, remove the filter end cover screws, then remove the end cover and filters.
3. Remove the pump plate screws and the pump plate.
4. Carefully remove the old rotor insert and blades.
5. Thoroughly clean the pump housing before installing the new rotor.
6. Check the gap on the new rotor. Adjust to 0.003 to 0.004 inches if necessary.
7. Assemble the unit and adjust the pump pressure according to your heater's specifications.

Note: If the rotor binds after assembly, disassemble the unit. Place fine sandpaper (600 grit) on a flat surface and sand the rotor lightly in a motion similar to Figure 33 (Sanding Rotor) four times, then reassemble.

Visual Guide for Installation:



Detailed visual steps for installing the rotor kit components.

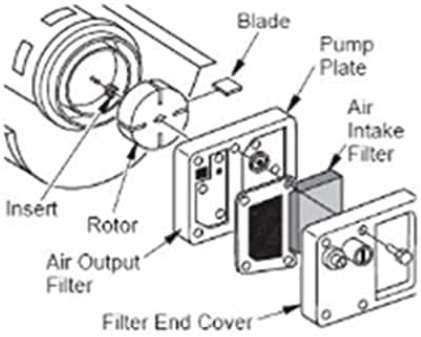

Figure 31 - Rotor Location, 110/115/155/165/200 Models

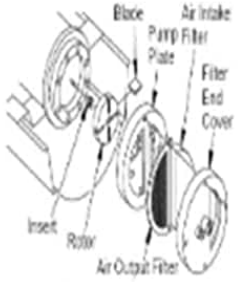

Figure 30 - Rotor Location, 40/50/55/60/70 Models

1. Remove upper shell
2. Remove filter end cover crews using a 5/16" nut driver and remove the end cover and filters.
3. Remove pump plate screws and pum plate.
4. Remove the rotor insert and blades.
5. Clean pump housing thoroughly before installing new rotor.
6. Check the gap on rotor. Adjust to .003 to .004 if needed.
7. Assemble unit and adjust pump pressure.

Note: If after assemble the rotor is binding. disassemble unit and place fine sandpaper (600grit) on a flat surface. Sand rotor lightly in a figure 8 motion 4 times and reassemble.

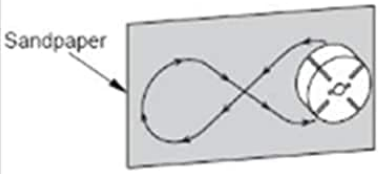

Figure 33 - Sanding Rotor

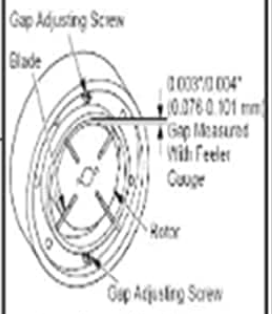

Figure 32 - Gap Adjusting Screw Locations

Correct Pump Pressure is crucial for your heater to run properly

PUMP PRESSURE ADJUSTMENT

1. Remove pressure gauge plug from filter end cover (see Figure 13).
2. Install accessory pressure gauge (part number HA3180).
3. Start heater (see *Operation*, page 5). Allow motor to reach full speed.
4. Adjust pressure. Turn relief valve to right to increase pressure. Turn relief valve to left to decrease pressure. See specifications correct pressure for each model (see Figure 14).
5. Remove pressure gauge. Replace pressure gauge plug in filter end cover.



Figure 13 - Pressure Gauge Plug Removal (40/55/60/70 Models Shown)

Model	Pump Pressure
40	3.0 PSI
55	3.4 PSI
60	3.4 PSI
70	4.7 PSI
110	5.3 PSI
115	5.3 PSI
150	5.4 PSI
155	5.4 PSI
165	5.6 PSI
200	6.2 PSI

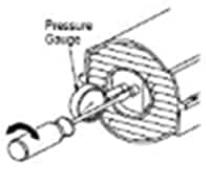

Figure 14 - Adjusting Pump Pressure (40/55/60/70 Models Shown)

Image showing the PP204 HA3004 1/2" Rotor Kit with key dimensions for the rotor and insert.

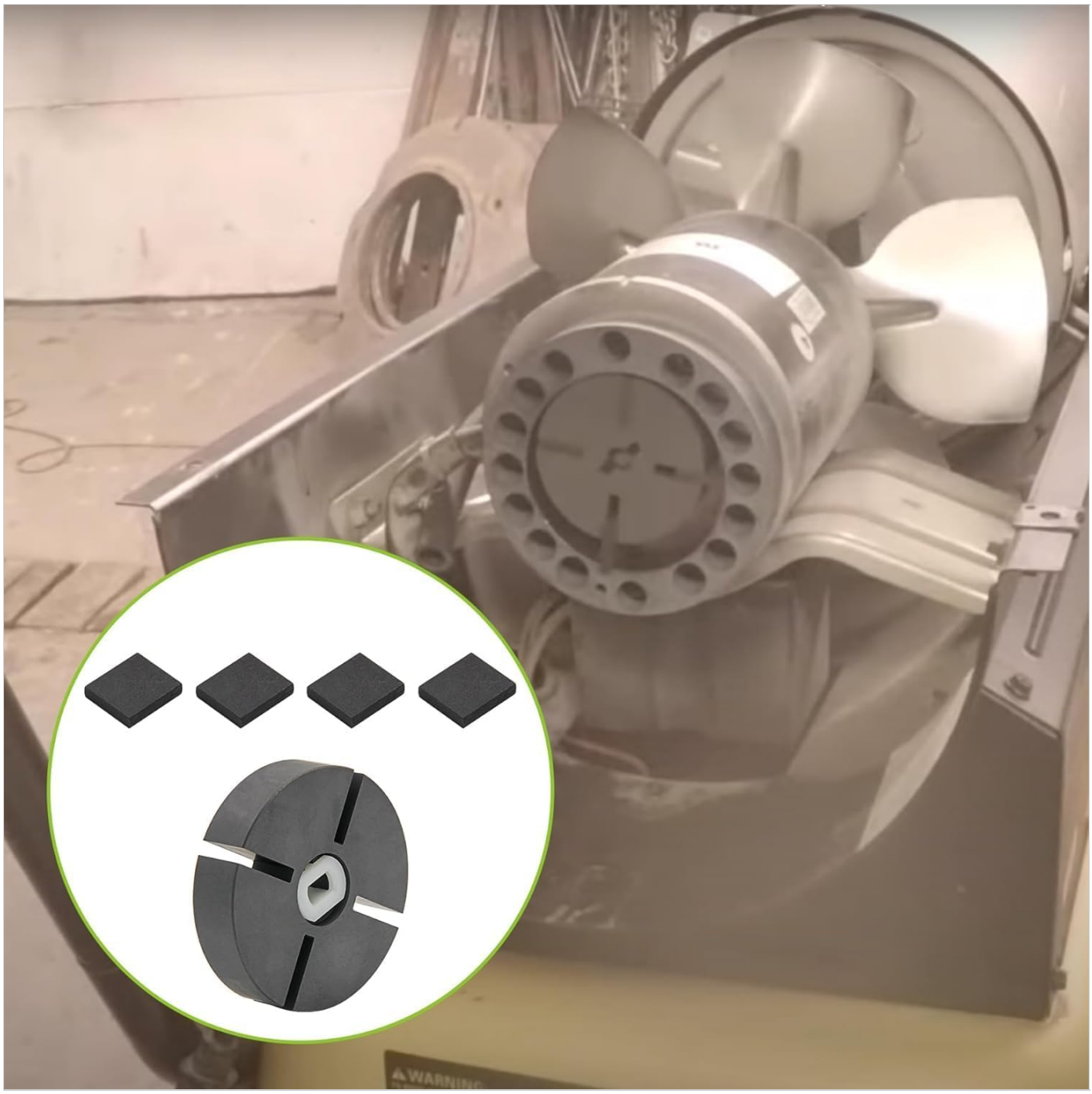

Image displaying the individual components of the Huarntwo PP204 HA3004 1/2" Rotor Kit, including the rotor, vanes, and insert.

3. Operating Instructions

Specific operating instructions for the heater itself are typically provided in the heater's original manual. This rotor kit is a replacement component and does not alter the heater's fundamental operation. Ensure all connections are secure and pump pressure is correctly adjusted after installation before operating your heater.

4. Maintenance

Regular maintenance of your heater, including inspection of the rotor kit, is recommended to ensure longevity and efficient operation. Check the rotor and vanes periodically for wear or damage. If the rotor binds, refer to the installation steps for sanding instructions. Always ensure the pump housing is clean.

5. Troubleshooting

If your heater experiences issues after installing the rotor kit, consider the following:

- **Rotor Binding:** If the rotor is binding, disassemble and lightly sand the rotor as described in the installation section.
- **Incorrect Pump Pressure:** Ensure the pump pressure is adjusted to the manufacturer's specifications for your heater model. A vacuum gauge may be required for accurate adjustment.
- **Improper Vein Installation:** Verify that all vanes are installed flush within the rotor. Incorrectly installed vanes can lead to air pressure loss.

For further troubleshooting, consult your heater's original instruction manual or contact a qualified technician.

6. Specifications

Feature	Detail
Brand	Huarntwo
Model	PP204 HA3004
Rotor Thickness	1/2 inch
Rotor Diameter	2 1/8 inches
Material	Alloy Steel
Item Weight	2.08 ounces
Package Dimensions	2.36 x 2.28 x 0.94 inches
UPC	791311070409

7. Media Resources

Product Images:

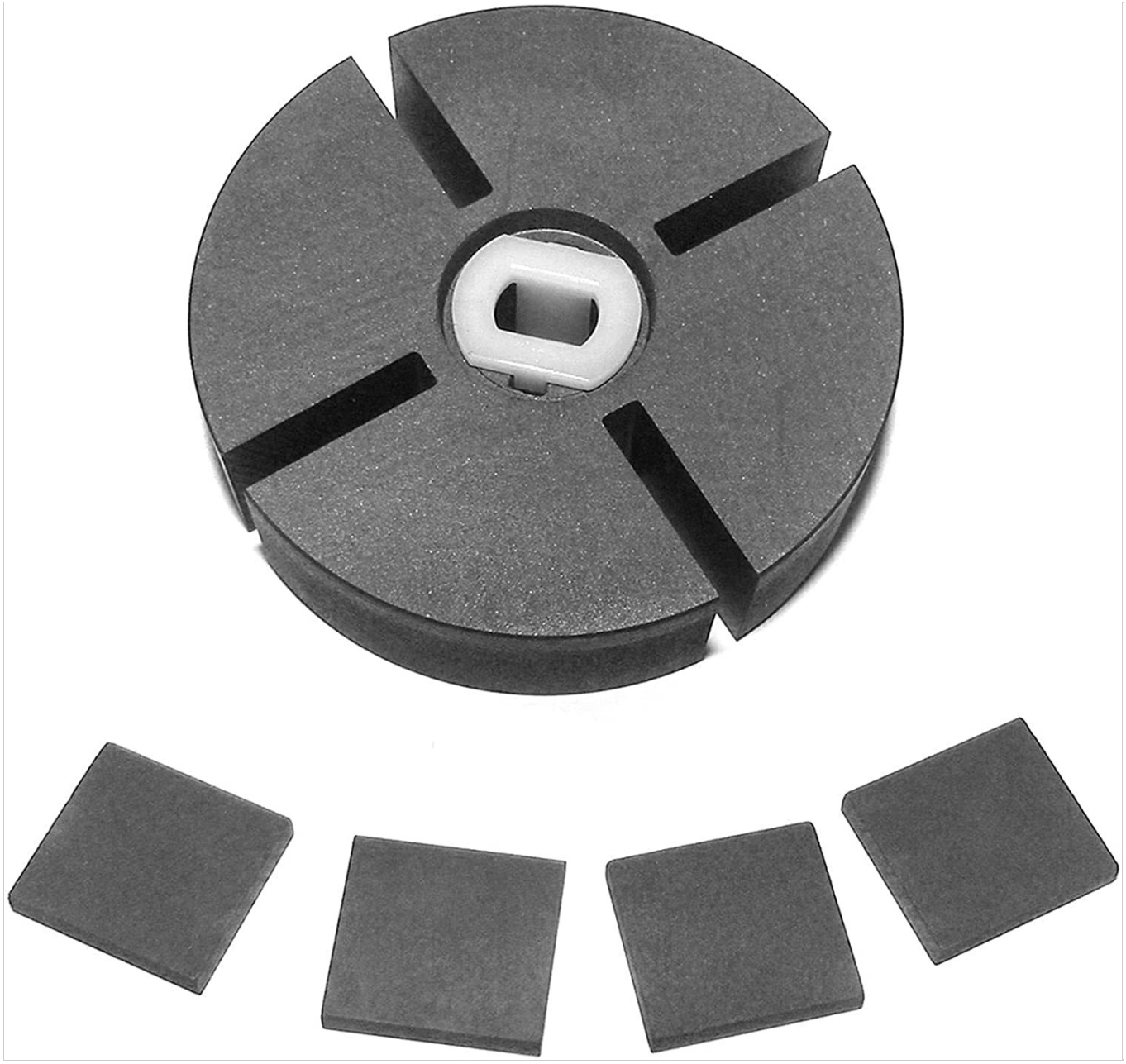

Main product image of the Huarntwo PP204 HA3004 1/2" Rotor Kit.

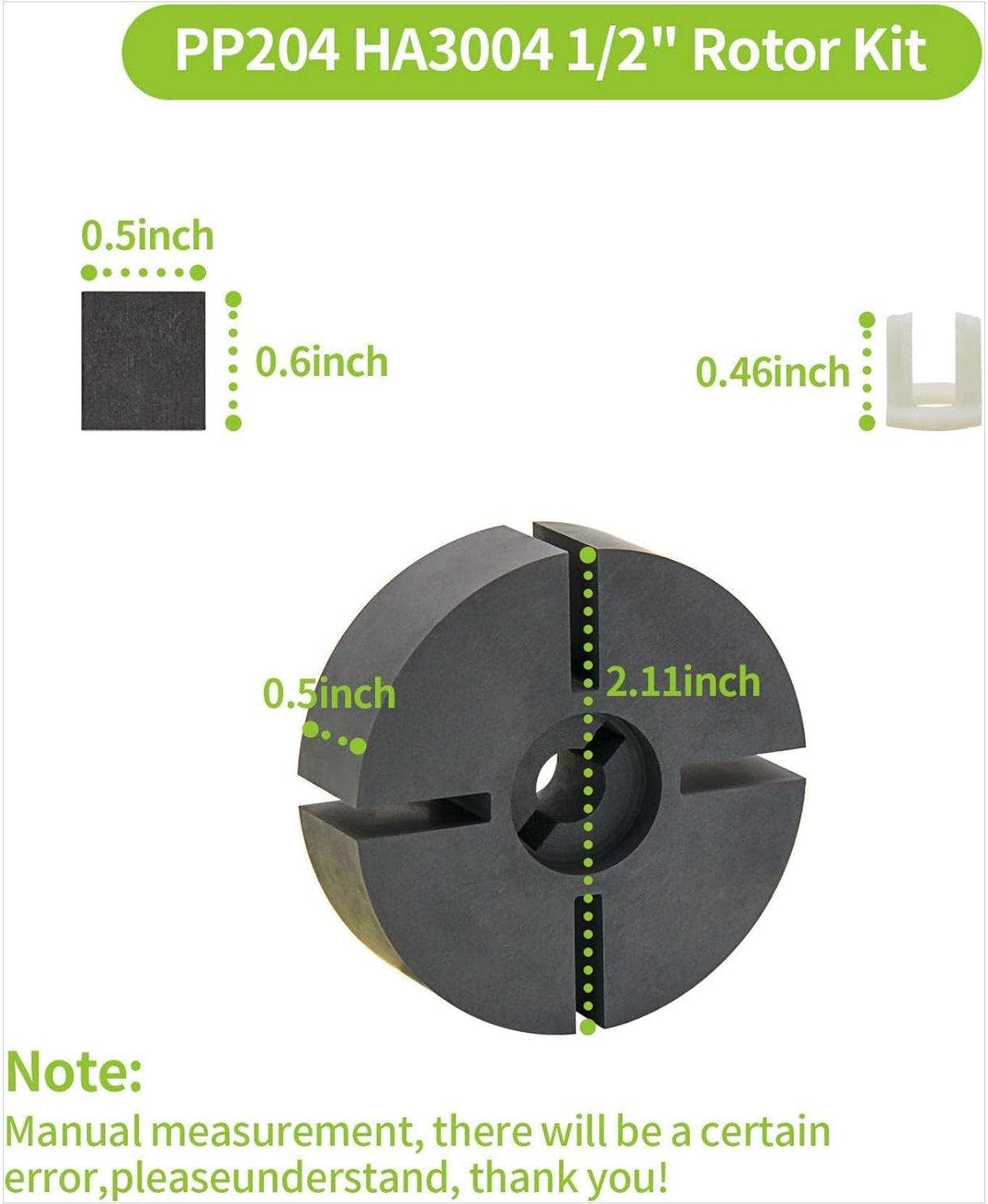

The Huarntwo PP204 HA3004 1/2" Rotor Kit shown in its protective packaging.



Image illustrating the compatibility of the Huarntwo PP204 HA3004 1/2" Rotor Kit with various Desa brand heaters, including Dayton, Knipco, Collin, Mastercraft, Reddy's, Remington, Sears, and TSC.



Image highlighting the compatibility of the Huarntwo PP204 HA3004 1/2" Rotor Kit with Pinnacle Brands such as ProTemp, Master, Remington, Heat-Stream, WorkHorse, Heat Hog, and SunStream.



The Huarntwo PP204 HA3004 1/2" Rotor Kit displayed with its clear plastic storage case.



An empty clear plastic storage case, designed to hold the Huarntwo PP204 HA3004 1/2" Rotor Kit components.

Official Product Videos:

▶ **Watch video online**

Video: HAKATOP F226831 Rotor Kit Overview

This short video provides a quick overview of the HAKATOP F226831 Rotor Kit, highlighting its components and features. It

demonstrates the quality and precision engineering of the parts, emphasizing lasting performance and heat delivery.

▶ **Watch video online**
Rotor kit install video

Video: Rotor Kit Installation Guide
This detailed video provides a comprehensive guide on how to install a rotor and vane kit in a torpedo heater. It covers the process of removing old components, cleaning the pump housing, installing the new drive key, rotor, and vanes, and ensuring proper flush fitment for optimal air pressure. The video demonstrates the installation on both DeWalt and All-Pro heaters, emphasizing commonalities and critical steps for correct assembly.

8. Warranty and Support

Specific warranty information for the Huarntwo PP204 HA3004 1/2" Rotor Kit is not provided in the available product details. For warranty claims or technical support, please refer to the product packaging or contact the manufacturer, Huarntwo, directly. Ensure you retain your proof of purchase for any warranty-related inquiries.

Ask a question about this manual

Ask about setup, troubleshooting, compatibility, parts, safety, or missing instructions. Manuals+ will review the question and use this page's manual context to help answer it.

Name
Anonymous

Email
you@example.com

After a successful submission, we securely hash the supplied account or form email before sending it to Microsoft Advertising for conversion attribution. Privacy details.

Question
Example: How do I reset this device or fix this error?

Details
Model number, symptoms, what you tried, or the section of the manual you are using.

Submit question

Open the live page

https://manuals.plus/asin/B07VYFXQWP

More documents and user manuals: **https://manuals.plus/**