SHW OD-009-3

SHW 48-Inch Electric Height Adjustable Standing Desk

Model: OD-009-3
Brand: SHW

Introduction

Thank you for choosing the SHW 48-Inch Electric Height Adjustable Standing Desk. This manual provides detailed instructions for assembly, operation, and maintenance to ensure optimal performance and longevity of your new desk. Designed for modern home and office environments, this desk promotes a healthier and more productive workspace by allowing seamless transitions between sitting and standing positions.



Figure 1: SHW 48-Inch Electric Height Adjustable Standing Desk setup.

Key Features

- **Smooth Electric Height Adjustment:** Transition seamlessly between sitting and standing with the touch of a button. The quiet motorized lift system ensures stable and ergonomic positioning throughout the workday.
- **Programmable Digital Controller:** Features an intuitive LED handset with four memory presets, allowing quick access to your preferred height settings for improved workflow and comfort.
- **Optimized for Office Productivity:** Designed with the modern professional in mind, the 48-inch surface fits effortlessly in home offices or collaborative workspaces while supporting essential tech setups.
- **Integrated Cable Management and Hooks:** Includes a built-in cable tray to neatly organize cords and reduce desktop clutter, maintaining a clean and professional workspace.
- **Product Dimensions:** 48" D x 24" W x 28-45" H.

Important Safety Information

Proposition 65 Warning: This product may contain chemicals known to the State of California to cause cancer and birth defects or other reproductive harm.

This product has a maximum weight capacity of 100 pounds (45.36 kg). Ensure stability when adjusting the height and do not exceed this weight limit. Carefully follow the manufacturer's instructions for assembly. Prolonged use of standing desks may cause discomfort or fatigue. Users should take regular breaks and maintain proper posture. Always keep children and pets away from the desk during operation. Ensure no obstacles are in the path of the desk's movement. Do not sit or stand on the desk. Disconnect power before cleaning or maintenance.

Assembly Instructions

Assembly of your SHW Electric Standing Desk is designed to be straightforward. Most users can complete the assembly within an hour using the provided tools and minimal additional equipment.

Required Tools:

- Included 4mm Allen Wrench (x1)
- Phillips Head Screwdriver (not included, needed for control panel attachment)

Step-by-Step Assembly:

1. **Unpack and Identify Parts:** Carefully remove all components from the packaging. Verify that all parts listed in the assembly diagram are present.
2. **Assemble the Legs:** Attach the desk legs to the crossbar using the provided M6x13 screws. Ensure all connections are secure.
3. **Attach the Desktop:** Carefully place the desktop onto the assembled frame. Secure the desktop to the frame using the M4x20 screws. Note that the desktop may come in two pieces that fit together seamlessly.
4. **Install Control Panel:** Mount the digital control panel to the underside of the desk using a Phillips head screwdriver.
5. **Connect Wiring:** Connect all motor and control panel wiring according to the diagram. Ensure cables are neatly routed and secured to prevent interference with desk movement.
6. **Install Cable Management Tray and Hooks:** Attach the integrated cable management tray and utility hooks to the underside of the desk. These are designed to help organize power cords and hang accessories like headphones or backpacks.
7. **Level the Desk:** Adjust the leveling feet at the bottom of each leg to ensure the desk is stable and level on your floor.

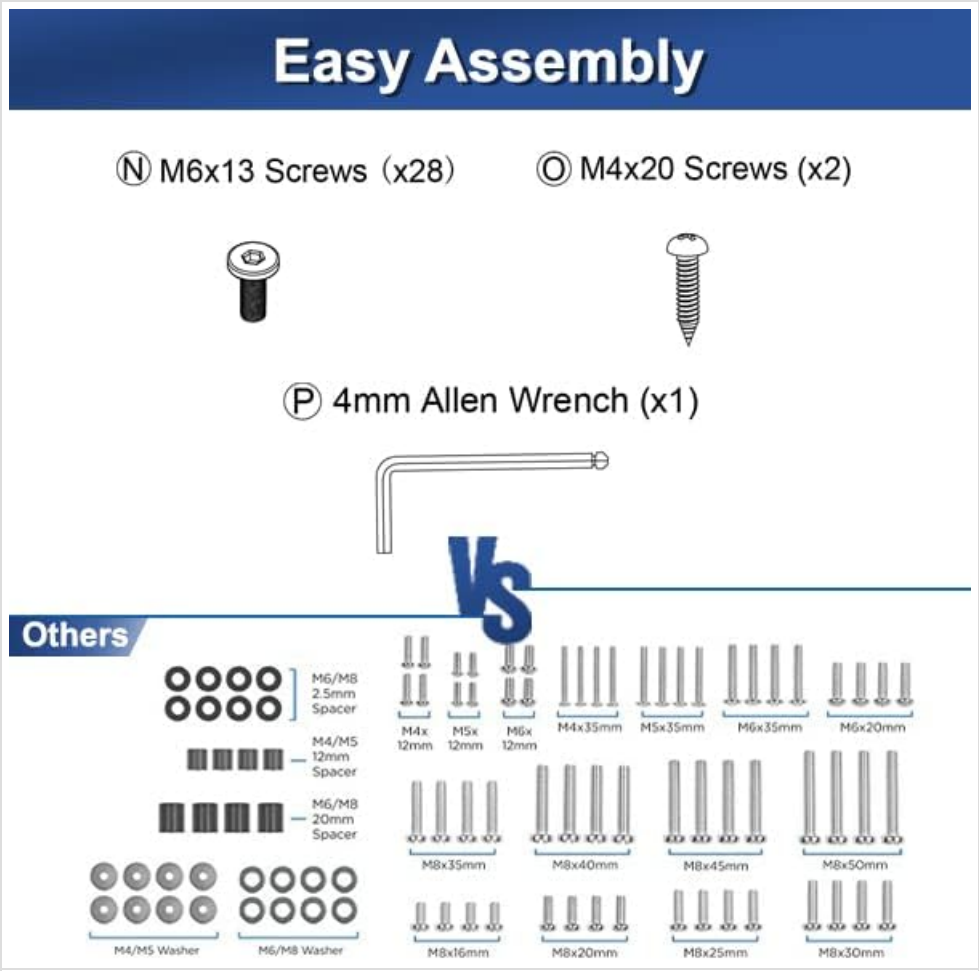

Figure 2: Simplified assembly process with minimal hardware.

Operating Instructions

Electric Height Adjustment:

The SHW Electric Standing Desk features a smooth and quiet motorized lift system. Use the up (▲) and down (▼) arrow buttons on the digital control panel to manually adjust the desk height to your desired position. The current height will be displayed on the LED screen.

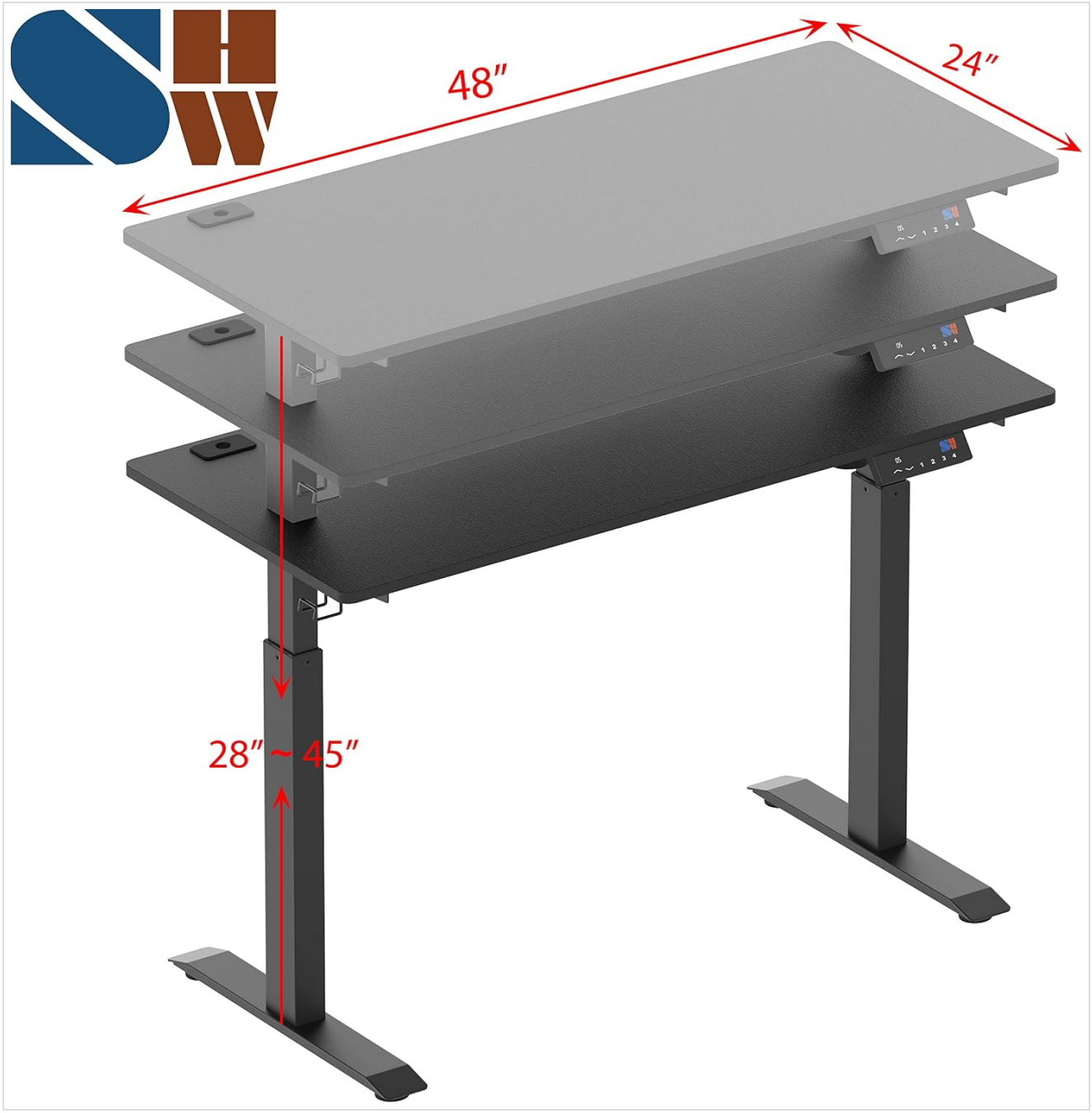

Figure 3: Digital control panel for height adjustment.

Programmable Memory Presets:

The control panel allows you to save up to four preferred height settings for quick and convenient adjustment.

1. **To Set a Preset:** Adjust the desk to your desired height using the up/down arrows. Press the 'M' button, then immediately press one of the number buttons (1, 2, 3, or 4) to save the current height to that preset. The display will confirm the setting.
2. **To Recall a Preset:** Simply double-click the corresponding number button (1, 2, 3, or 4). The desk will automatically move to the saved height.

Cable Management:

The desk is equipped with an integrated cable management tray and hooks to help keep your workspace tidy.

- **Cable Tray:** Use the wire mesh tray located under the desktop to route and conceal power strips, adapters, and excess cables. This prevents dangling wires and maintains a clean aesthetic.
- **Utility Hooks:** Two hooks are provided, one on each side of the desk, ideal for hanging headphones,

backpacks, or other accessories.



Figure 4: Integrated cable management tray and utility hooks.

Maintenance

Regular maintenance will help prolong the life of your SHW Electric Standing Desk.

- **Cleaning:** Wipe the desktop and frame with a soft, damp cloth. Avoid using abrasive cleaners or harsh chemicals that could damage the finish.
- **Check Connections:** Periodically check all screws and connections to ensure they are tight and secure.
- **Weight Limit:** Always adhere to the maximum weight capacity of 100 pounds (45.36 kg) to prevent damage to the motor and frame.
- **Cable Inspection:** Ensure cables are not pinched or tangled, especially when adjusting height.

Troubleshooting

If you encounter any issues with your desk, please refer to the following common troubleshooting tips:

- **Desk Not Moving:** Check if the power cord is securely plugged into both the desk and the wall outlet. Ensure there are no obstructions preventing movement.
- **Uneven Height:** If the desk appears uneven, check the leveling feet at the bottom of the legs and adjust them as needed. Ensure the desk is on a flat, stable surface.

- **Motor Noise:** A slight humming sound during operation is normal. If you hear unusual or loud noises, discontinue use and check for any loose parts or obstructions.
- **Control Panel Not Responding:** Unplug the desk from the power outlet for 10-15 seconds, then plug it back in to reset the system.

If problems persist after attempting these steps, please contact SHW customer support for further assistance.

Specifications

Attribute	Value
Brand	SHW
Model Number	OD-009-3
Product Dimensions (D x W x H)	24"D x 48"W x 28"H
Adjustable Height Range	28" to 45" (71.12 cm to 114.3 cm)
Color	Black
Top Material Type	Engineered Wood (Laminated)
Base Material	Metal (Alloy Steel)
Maximum Weight Recommendation	100 Pounds (45.36 kg)
Lifting Mechanism	Electric
Special Features	Height Adjustable, Ergonomic, Memory Preset, Cable Management



Figure 5: Desk dimensions and weight capacity.

Warranty and Support

The SHW 48-Inch Electric Height Adjustable Standing Desk comes with a Limited Warranty. For specific details regarding warranty coverage, terms, and conditions, please refer to the warranty information provided with your product packaging or contact SHW customer support.

For technical support, troubleshooting assistance, or parts replacement, please visit the official SHW website or contact their customer service department. Please have your model number (OD-009-3) and purchase information ready when contacting support.

Ask a question about this manual

Ask about setup, troubleshooting, compatibility, parts, safety, or missing instructions. Manuals+ will review the question and use this page's manual context to help answer it.

Name

Anonymous

Email

you@example.com

After a successful submission, we securely hash the supplied account or form email before sending it to Microsoft Advertising for conversion attribution. Privacy details.

Question

Example: How do I reset this device or fix this error?

Details

Model number, symptoms, what you tried, or the section of the manual you are using.

Submit question